Finishing Accessories

High Quality Enhancements for Graco Finishing Systems

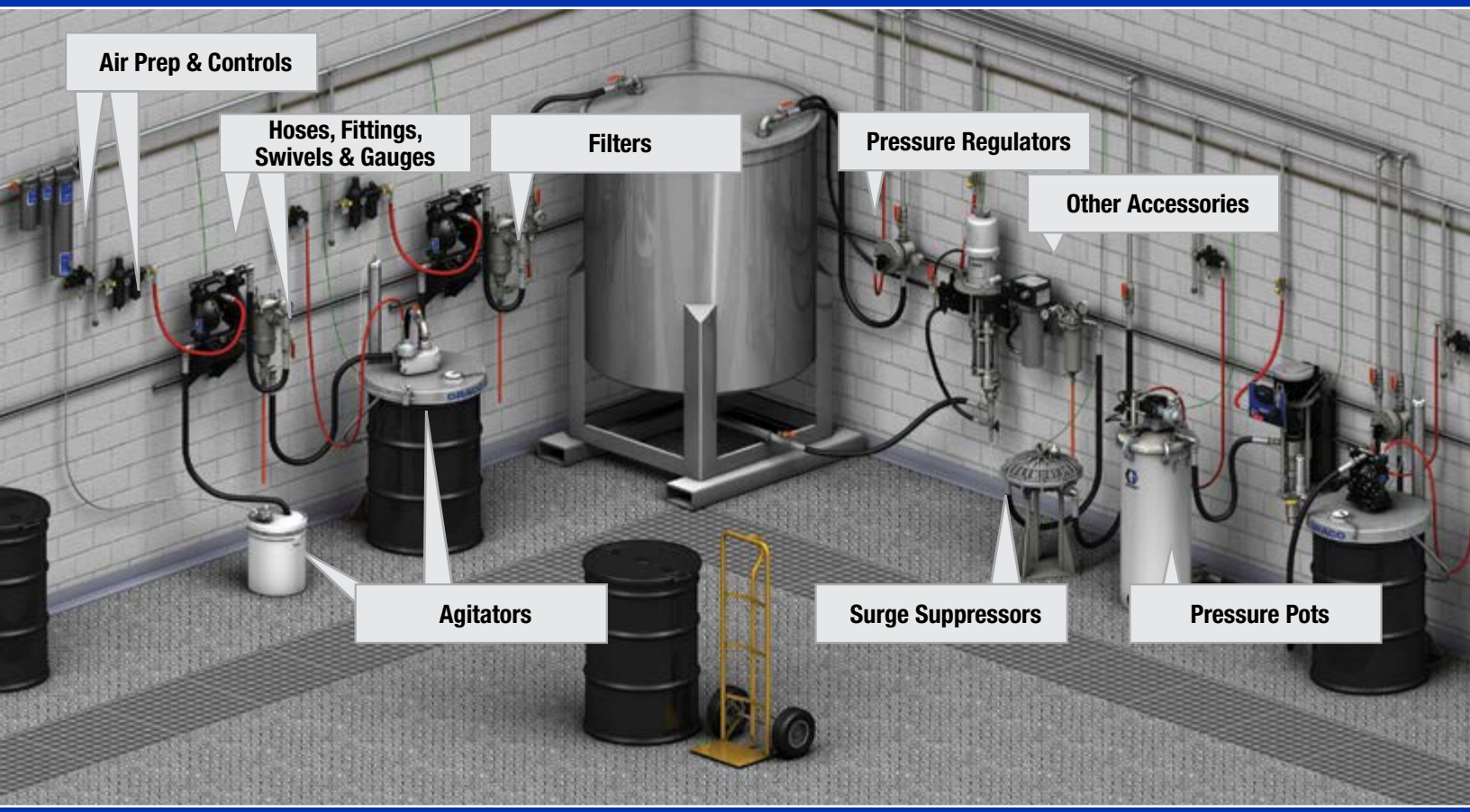

PROVEN QUALITY. LEADING TECHNOLOGY

Contents

Pressure Pots

2 Gallon (8 liter) 4
5 Gallon (19 liter) 5
10 Gallon (38 liter) 6
15 Gallon (57 liter) 7
2.5 Gallon (9.5 liter) 8
Tank Liners 9

Agitators

Drum Agitators
Drum Cover and Mix Tank 11
Clamp Mounted Agitators 12
Expanding Blade Agitators 13
Twistork® Agitators 14
Heavy Duty In-Drum Back-Geared Agitator 15
Elevators 16
Agitator Speed Controller 17
Replacement Air Motors 18

Pail Agitators
Pail Cover Agitator 19

Tank Agitators
Heavy Duty Pressure Tank Agitators 20

Electric Agitators
Electric Agitators 21

Other Agitators
55 Gallon Drum Cover 25
Elevators 26

Air Preparation and Controls

3-Stage Desiccant Drying System 28
3-Stage Membrane Drying System. 29
Air Control Unit. 30
In-line Air Filters and Coalescer 31
Low Pressure Air Regulators. 32
Air Control 33
FRL Filter, Regulator, Lubricator 34

Pressure Regulators

Fluid Pressure Regulators
Low Pressure 38
Low Pressure Lightweight Composite. 39
Precision Flow 40
High Pressure Corrosion Resistant 41
High Pressure Corrosion Resistant Mini 42
High Pressure 43

Fluid Back Pressure Regulators (BPR)
Low Pressure Corrosion Resistant 44
Low Pressure Mini 45
Air Operated Corrosion Resistant 46
Low Shear Corrosion Resistant. 47
Low Pressure BPR 48
High Pressure. 49

Gun Regulators
Gun-Mounted Fluid Pressure Regulator 50
Tamper-Resistant Circulating Restrictor Valves 51
Quick Couplers. 52

Surge Suppressors

High Flow. 54
In-line 55
Tee. 56

Filters

Stainless Steel High Pressure Filter 58
High Pressure Red Alert Filter. 59
Low Pressure Red Alert Filter 60
Model 6 Bag Filter Housings. 61
Model 6 Bag Filter Elements. 62
Model 12 Bag Filter Housings. 63
Model 12 Bag Filter Elements. 64

Hoses, Fittings, Swivels and Gauges

Bulk Hose and Fittings - Nylon Fluid Hose. 66
Bulk Hose and Fittings - Braided Fluid Hose 67
Bulk Hose and Fittings - Flexible Air Hose. 68
Coupled Stainless Steel Hoses 69
Moisture-Lok Hoses 70
High Pressure Swivels 71
Automatic Spray Gun Valve. 72
Check Valves 73
Pressure Relief Valve 74
Ball Valves 75
Pipe Fittings 76
Pipe Swivels 77
Fluid and Air Gauges 78

Other Accessories

Standard Gun Washer. 79
Professional Gun Washer 80
Fluid Heater Kit 81
Siphon Kits. 82
Ground Strap 83

Pressure Pots

Designed with electroplated surfaces that prevent debris build-up and keep your operation free of contaminants, Graco pressure pots are precision welded and surfaced. The siphon tube and bottom outlet of the pressure pot allow for different feed methods, and the liners make clean up easy and mess free. They also meet our stringent internal requirements that exceed industry standards such as ASME and FM.

Pressure Pots are a crucial element of the finishing system and can be used in a variety of applications including:

Fluid Supply Systems for Air Spray or Feeding Other Equipment:
They provide pulse-free, ultra-precise fluid delivery at low pressures and flow rates that are not reliably attained with pumps and other equipment. This is ideal for customers that demand reliable, affordable and easy fluid delivery.

Sealed Reservoir for Moisture Sensitive or Corrosive Materials:
Store your catalyst and other moisture sensitive materials in our sealed pressure tanks to protect material consistency. Pressure tanks are ideal for supplying 2K proportioners with resin or catalyst to ensure an effective and consistent sealing surface for your finishing operation.

Vacuum Tank:
When you need to remove entrapped air from material for precision mixing, Graco pressure tanks provide a great degassing option to eliminate foam from your material to reduce surface defects and pitting.

Pressure Pots

2 Gallon (8 liter)

Pressure Pots

- ASME rated to ensure it meets factory standards
- High quality stainless steel design is compatible with many materials
- Use in stand-alone spraying, material/catalyst supply, or as a moisture sensitive material reservoir

236158

Ordering Information

Capacity	Height in (cm)	Weight lb (kg)	Models with Agitators: Low Pressure (HVLP) Regulated to 15 psi (1.05 bar, 0.105 MPa)	Models with Agitators: High Pressure Regulated to 100 psi (7 bar, 0.7 MPa)	Models without Agitators: Low Pressure (HVLP) Regulated to 15 psi (1.05 bar, 0.105 MPa)	Models without Agitators: High Pressure Regulated to 100 psi (7 bar, 0.7 MPa)
2 Gallon (8 liter)	26.0 (66.0)	38 (17)	236156	236158		
2 Gallon (8 liter)	25.4 (64.5)	30 (14)			236155	236157

Part Number	Description
236086	Bare tank (pot, lid, gasket only)
236676	Bottom outlet kit
15D058	Tank liner (Qty 20)
111381	Replacement C-Clamps
117572	Standard Santoprene gasket
117575	Premium PTFE coated gasket
236859	Agitator assembly

2 gal (8 l) tank has a direct-drive blade high-speed agitator.
New optional Gun Air Regulator Kit (235042) can be added to all the tanks above.

Instruction manual 308370.

5 Gallon (19 liter)

Pressure Pots

- ASME rated to ensure it meets factory standards
- High quality stainless steel design is compatible with many materials
- Use in stand-alone spraying, material/catalyst supply, or as a moisture sensitive material reservoir

236152

236149

Ordering Information

Capacity	Height in (cm)	Weight lb (kg)	Models with Agitators: Low Pressure (HVLP) Regulated to 15 psi (1.05 bar, 0.105 MPa)	Models with Agitators: High Pressure Regulated to 100 psi (7 bar, 0.7 MPa)	Models without Agitators: Low Pressure (HVLP) Regulated to 15 psi (1.05 bar, 0.105 MPa)	Models without Agitators: High Pressure Regulated to 100 psi (7 bar, 0.7 MPa)
5 Gallon (19 liter)	30.5 (77.5)	74 (34)	236146	236152		
5 Gallon (19 liter)	30.5 (77.5)	65 (30)			236143	236149

Part Number	Description
236087	Bare tank (pot, lid, gasket only)
244147	Supply tank (pot, lid, gasket, plugs, fill port cap, pick-up tube, liner)
236677	Bottom outlet kit
15D059	Tank liner (Qty 20)
186517	Stainless steel paddle kit
117571	Standard Santoprene gasket
117574	Premium PTFE coated gasket
236661	Agitator assembly

New optional Gun Air Regulator Kit (235042) can be added to all the tanks above.
All 5, 10 and 15 gal (19, 38, 57 l) pressure tanks with agitators feature heavy-duty back-geared models.

Instruction manual 308369.

10 Gallon (38 liter)

Pressure Pots

- ASME rated to ensure it meets factory standards
- High quality stainless steel design is compatible with many materials
- Use in stand-alone spraying, material/catalyst supply, or as a moisture sensitive material reservoir

236150

236153

Ordering Information

Capacity	Height in (cm)	Weight lb (kg)	Models with Agitators: Low Pressure (HVLP) Regulated to 15 psi (1.05 bar, 0.105 MPa)	Models with Agitators: High Pressure Regulated to 100 psi (7 bar, 0.7 MPa)	Models without Agitators: Low Pressure (HVLP) Regulated to 15 psi (1.05 bar, 0.105 MPa)	Models without Agitators: High Pressure Regulated to 100 psi (7 bar, 0.7 MPa)
10 Gallon (38 liter)	33.9 (88.0)	85 (39)	236147	236153		
10 Gallon (38 liter)	33.9 (88.0)	76 (35)			236144	236150

Part Number	Description
236088	Bare tank (pot, lid, gasket only)
244148	Supply tank (pot, lid, gasket, plugs, fill port cap, pick-up tube, liner)
236677	Bottom outlet kit
15D060	Tank liner (Qty 20)
186517	Stainless steel paddle kit
117571	Standard Santoprene gasket
117574	Premium PTFE coated gasket
236662	Agitator assembly

New optional Gun Air Regulator Kit (235042) can be added to all the tanks above.
All 5, 10 and 15 gal (19, 38, 57 l) pressure tanks with agitators feature heavy-duty back-geared models.

Instruction manual 308369.

15 Gallon (57 liter)

Pressure Pots

- ASME rated to ensure it meets factory standards
- High quality stainless steel design is compatible with many materials
- Use in stand-alone spraying, material/catalyst supply, or as a moisture sensitive material reservoir

236151

236154

Ordering Information

Capacity	Height in (cm)	Weight lb (kg)	Models with Agitators: Low Pressure (HVLP) Regulated to 15 psi (1.05 bar, 0.105 MPa)	Models with Agitators: High Pressure Regulated to 100 psi (7 bar, 0.7 MPa)	Models without Agitators: Low Pressure (HVLP) Regulated to 15 psi (1.05 bar, 0.105 MPa)	Models without Agitators: High Pressure Regulated to 100 psi (7 bar, 0.7 MPa)
15 Gallon (57 liter)	44.6 (113.2)	101 (46)	236148	236154		
15 Gallon (57 liter)	44.6 (113.2)	92 (42)			236145	236151

Part Number	Description
236089	Bare tank (pot, lid, gasket only)
244149	Supply tank (pot, lid, gasket, plugs, fill port cap, pick-up tube, liner)
236677	Bottom outlet kit
15D060	Tank liner (Qty 20)
186517	Stainless steel paddle kit
117571	Standard Santoprene gasket
117574	Premium PTFE coated gasket
236663	Agitator assembly

New optional Gun Air Regulator Kit (235042) can be added to all the tanks above.
All 5, 10 and 15 gal (19, 38, 57 l) pressure tanks with agitators feature heavy-duty back-geared models.

Instruction manual 308369.

2.5 Gallon (9.5 liter) Aluminum

Pressure Pots

- Painted aluminum tank ideal for adhesives or other coatings
- Single or dual regulator options for pulsation-free fluid delivery
- Built-in handle for easy movement

223833

Ordering Information

Part No.	Description	Tank Capacity	Max. Working Pressure	Relief Valve Setting	Fluid Inlet	Fluid Outlet	Wetted Parts	Air Inlet	Size (H x W) in (cm)
171226	2-1/2 Gallon Pressure Pot	2.5 gal (9.5 l)	50 psi (3.5 bar, 0.35 MPa)	50 psi (3.5 bar, 0.35 MPa)	1⁄4 npt(m)	3⁄8 npsm(m)	Aluminum, brass, steel, buna-N	1⁄4 npt(m)	21 x 11-1/4 (53 x 286
223833	2-1/2 Gallon Pressure Pot with Dual Regulators	2.5 gal (9.5 l)	50 psi (3.5 bar, 0.35 MPa)	50 psi (3.5 bar, 0.35 MPa)	1⁄4 npt(m)	3⁄8 npsm(m)	Aluminum, brass, steel, buna-N	1⁄4 npt(m)	21 x 11-1/4 (53 x 286

Instruction manual: 307133

Tank Liners

Pressure Pots

- Tough anti-static material resists cuts and tears for safe and clean handling
- Reduce cleaning time and keep materials segregated
- Reduce changeover time between jobs

Ordering Information

Part No.	Description
15D058	20 count, 2 gal (9 l) pressure tank liners
15D059	20 count, 5 gal (19 l) pressure tank liners
15D060	20 count, 10 gal (45 l) pressure tank liners
112077	5 count, 2.5 gal (11 l) pressure tank liners
112078	25 count, 2.5 gal (11 l) pressure tank liners

Agitators

Mixing is step one!

If the material is not properly mixed, it will never reach optimal performance conditions despite the highest quality pumping, proportioning, and spray guns.

Graco offers a complete line of high quality mixing solutions for many different materials and containers. Our **Agitator Speed Controller** ensures that your mixing process can be controlled to eliminate paint shear, foaming, and unnecessary compressed air consumption.

Our mixing equipment will make sure you are set up for success starting with step one.

Agitators

Drum and Mix Tank

Drum Agitators

- Agitators mount directly to mix tank or drum covers
- Dual propeller ensures efficient and thorough mixing
- Easy adjustment knob for fine tuning agitator speed to ideal mixing parameters

207199

Ordering Information

Part No.	Description	Drive	HP	Length in (cm)	Material	Manual
206758	Dual round prop; mounts on cover	Air	1/2	31.25 (79.3)	CS	306840
207199	Includes 206758 and 55 gallon (210 liter) cover 2 in NPSM bung	Air	1/2	31.25 (79.3)	CS (SST cover)	306938
207953	Dual round prop (3 blade each)	Air	3/4	29 (73.6)	CS	306840
222698*	Includes single round prop	Air	1/2	31.25 (79.3)	SST	306840
206760	Dual round prop	Air	1.5	33.25 (84.4)	CS, Aluminum	306840

* Waterborne compatible

Part Number	Description
190192	Agitator cover gasket

Clamp Mounted Agitators

(except 225883)

Drum Agitators

- Clamp mounts agitator directly to drum
- Adjustable shaft angle to reduce mixing vortex and air entrapment
- Dual propeller ensures efficient and thorough mixing
- Easy adjustment knob for fine tuning agitator speed to ideal mixing parameters

225831

Ordering Information

Part No.	Description	Drive	HP	Length in (cm)	Material	Manual
225883	Includes dual round prop; open drum	Air	2-1/2	41.5 (105.4)	CS, Iron, Aluminum	306426
225831	Includes dual round prop; open drum	Air	1	41.5 (105.4)	CS, Aluminum, Ductile Iron, Bronze	306358

Expanding Blade Agitators

Drum Agitators

- Corrosion resistant materials
- Threads into 1.5” or 2” drum bung
- Includes angled adapter reduces vortexing and allows for off center mounting
- Customize configuration by adjusting blade height or by adding additional blade assemblies
- Collapsible blades fit through drum bung and expand when spinning for efficient mixing

24C728

Ordering Information

Part No.	Description	Drive	HP	Max. Air Input psi (bar)	Max. Speed Recommended	Wetted Parts
24C728	Low Viscosity air driven expanding blade bung-mounted agitator	Air	1	100 (7)	500 rpm	303, 18-8 and 304 SST
24C729	High Viscosity air driven expanding blade bung-mounted agitator	Air	1.75	100 (7)	500 rpm	303, 18-8 and 304 SST

Instruction manual: 313643

Twistork® Agitators

Drum Agitators

- Helix blade effectively mixes higher viscosity materials
- Mounts directly to 2 inch drum bung
- Stainless and carbon steel material options
- Siphon model allows material transfer though agitator shaft
- Sealed agitator drive prevents material contamination and evaporation
- ATEX approval for hazardous locations

236629

Ordering Information

Part No.	Description	Drive	HP	Length in (cm)	Material	Manual
• 224854	Twistork, non-siphon	Air	1-1⁄2	37.25 (95)	CS	308175
• 235534	Twistork, non-siphon	Air	1-1⁄2	37.25 (95)	304 SST	308175
• 236629*	Twistork, standard siphon model	Air	3⁄4	47.5* (121)	304 SST	308345

*Adjustable depth models for drums 31-1⁄2 in to 35-1⁄2 in (80 cm to 90.1 cm) deep.
Siphon tube designed to rest on drum bottom.
• Waterborne compatible

Heavy Duty In-Drum Back-Geared Agitator

Drum Agitators

- Corrosion resistant materials for high quality and long life
- Leak-free gearbox eliminates material contamination common with oil filled units
- Installs easily onto in-drum agitators
- Mounts directly to drum bung, choose 1.5 in or 2 in
- Includes 3/8 in, 7/16 in, ½ in, 5/8 in shaft adapters, compatible with several styles
- ATEX approval for hazardous locations

24C293

Ordering Information

Part No.	Description	Gear Reducer Ratio	Max. Air Input psi (bar)	Max. Speed Recommended	Wetted Parts
24C293	1.5 inch Bung Model Includes heavy duty agitator drive, plus 2 adapters for 4 different shaft sizes (3/8, 7/16, 1/2 and 5/8 inch)	24:1	100 (7)	100 rpm	303 SST
24C522	2 inch Bung Model Includes heavy duty agitator drive, plus 2 adapters for 4 different shaft sizes (3/8, 7/16, 1/2 and 5/8 inch)	24:1	100 (7)	100 rpm	303 SST
16A521	1.5 inch bung adapter				
16A754	2 inch bung adapter				
16H554	3/8 inch and 7/16 inch shaft adapter				
16H555	1/2 inch and 5/8 inch shaft adapter				

* Waterborne compatible

Instruction manual: 308609

Agitators

Heavy Duty Drum Agitator

Drum Agitators

- Heavy duty gearbox mixes high viscosity materials
- Leak-free and oil-less gearbox prevents material contamination
- Stainless steel agitator and cover for corrosion resistance and waterborne compatibility
- Twin paddles thoroughly mix finishing materials
- Siphon option allows material transfer through agitator shaft
- Access port for easy sampling and inspection of material during operation

231414

Ordering Information

Part No.	Descripiton	Drive	HP	Length inches (cm)	Material	Manual
• 231414	Heavy-duty back-geared agitator with elevator, drum cover and siphon kit	Air	1/2	32 (81.25)	SST	308609
• 231413	Same as 231414, except without siphon capability	Air	1/2	32 (81.25)	SST	308609
• 238157	Heavy-duty back-geared agitator	Air	1/2	32 (81.25)	SST	308609
• 240209	Same as 238157 with siphon kit	Air	1/2	32 (81.25)	SST	308609
• 238250	Siphon tube kit; fits 238157 agitator			43 (109)	SST	308609

• Waterborne compatible

Agitator Speed Controller

Drum Agitators

- Provides closed-loop speed control for agitators
- Maintains constant set speed even as viscosity or drum levels change
- Installs within minutes
- Prevents over-agitation of shear sensitive materials and foaming of waterborne materials
- Extends agitator lifetime by eliminating agitator over speeding
- Lowers energy costs by reducing air consumption

24G621

Ordering Information

Part No.	Description
24G621	Agitator Speed Controller

Compatible Graco Agitators

24C821, 24C524, 24C520, 240209, 231414, 222698, 207199, 204995, 24C729, 24C523, 24C519, 238157, 231413, 210068, 206760, 204482, 24C728, 24C522, 24C293, 236629, 225831, 210067, 206758, 203711

Compatible Graco Air Motors

101140, 16A871, 101388, 111310

Instruction manual: 3A1315

Replacement Air Motors

Drum Agitators

- Replacement air motors will give new life your existing agitators
- Use the chart below to determine compatibility
- Easy to select and install

101140

Ordering Information

Air Motor Part No.	Compatible Agitator Part No.
101140	203711, 204482, 204995, 206219, 206758, 207953, 210067, 210068, 222698, 236097, 236629, 238157, 238859, 238860, 240209, 962947, 24C293, 24C522
162425	236146, 236147, 236148, 236152, 236153, 236154, 236661, 236662, 236663
111310	224854, 235534, 24C729
101687	224571, 224572
101388	206706, 225831

Pail Cover Agitator

Pail Agitators

- Lift handles for easy moving and color changes
- Locking bolts to secure cover and reduce spills
- Ideal for wall mount pumps or spray packages

Ordering Information

Part No.	Description	Drive	HP	Length in (cm)	Material	Manual	Notes
• 222695	Round prop	Air	1/4	13.25 (33.6)	SST	307968	224571 Agitator and hose
• 204536	Round prop (3 blade)	Air	1/4	13.25 (33.6)	SST	306565	224571 Agitator and metal tube
226086	Pail cover, round prop	Air	1/4	13.25 (33.6)	CS	306670	224571 Agitator and CS pail cover
243340	SST pail cover with SST agitator	Air	1/4	13.25 (33.6)	SST	306565	224571 Agitator and SST pail cover
245081	SST pail agitator kit for TRITON pkgs	Air	1/2	13.25 (33.6)	SST	309305	
245895	CS pail cover with SST agitator	Air	1/4	13.25 (33.6)	CS	306565	
• 224572	Single round prop (3 blade)	Air	1/4	17.25 (43.8)	SST	306565	

• Waterborne compatible

Heavy Duty Pressure Tank Agitators

Agitator Kits

- 20:1 gear reduction to mix high viscosity materials, even at low speeds
- Sealed agitator shaft to prevent air leakage and contamination
- Built-in baffle and support for efficient mixing
- Compatible with Graco pressure tanks

236661

Ordering Information

Part No.	Description	Drive	HP	Length in (cm)	Material	Manual
• 236661	5 gallon (19 liter), gear reduced	Air	1/2	15 (38)	304/316 SST	308371
• 236662	10 gallon (38 liter), gear reduced	Air	1/2	20.75 (53)	304/316 SST	308371
• 236663	15 gallon (57 liter), gear reduced	Air	1/2	31 (79)	304/316 SST	308371

• Waterborne compatible

*Only use on Graco's 5, 10 and 15 gal ASME pressure tanks.

Electric Agitators

- Low shear mixing ensures uniform particle dispersion without material degradation
- Compatible with waterborne and solventborne materials
- Sealed gearbox eliminates maintenance
- Lubrication-free shaft seal prevents solvent attack of agitator bearings and gearbox
- Efficient motor provides superior mixing performance with less energy consumption
- Designed specifically to meet the demanding needs of the industrial finishing market
- Inverted duty motor for variable speed adjustment via variable frequency drive (VFD)

Manual number 310500

Mounting Specifications

LSA 200 System	
Electric-Powered Motor	3 phase, Class 1 Group D Explosion-proof
Gear Reduction	5:1
Power	0.25 HP
Speed	1750 rpm
Output	350 rpm
Electrical	230/460 volt
Electrical consumption at 460 volt	0.58 amps
Construction: Shaft and impeller Mounting plate	 316 SST electroless nickel plating
Shaft Diameter	16 mm

LSA 220 System	
Electric-Powered Motor	3 phase, Class 1 Group D Explosion-proof
Gear Reduction	6:3:1
Power	0.25 HP
Speed	1750 rpm
Output	280 rpm
Electrical	230/460 volt
Electrical consumption at 460 volt	0.58 amps
Construction: Shaft and impeller Mounting plate	 316 SST electroless nickel plating
Shaft Diameter	16 mm

LSA 300 System	
Electric-Powered Motor	3 phase, Class 1 Group D Explosion-proof
Gear Reduction	6:3:1
Power	0.25 HP
Speed	900 rpm
Output	140 rpm
Electrical	230/460 volt
Electrical consumption at 460 volt	0.58 amps
Construction: Shaft and impeller Mounting plate	 316 SST electroless nickel plating
Shaft Diameter	20 mm

Bolt Pattern

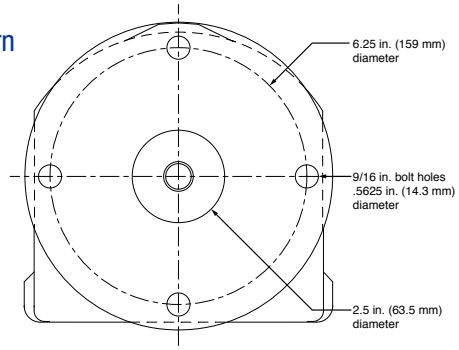

Electric Agitators section continues on next 3 pages

Electric Agitators

Order your Electric Agitator in 3 Easy Steps!

STEP 1

Sizing Guide

Use volume and viscosity to determine model and blade diameter.

LSA 200

Tank Volume	Fluid Viscosity (cps)	Recommended Blade Diameter
80 - 120 Gal (300 - 400 l)	<100 100 - 200 200 - 350	7.6 in (193 mm) 8.8 in (224 mm) 10.0 in (254 mm)
120 - 160 Gal (450 - 600 l)	<100 100 - 200	8.8 in (224 mm) 10.0 in (254 mm)
160 - 200 Gal (600 - 750 l)	<100	10.0 in (254 mm)

LSA 220

Tank Volume	Fluid Viscosity (cps)	Recommended Blade Diameter
130 - 160 Gal (490 - 600 l)	<100 100 - 200 200 - 350	10.0 in (254 mm) 11.2 in (284 mm) 11.8 in (299 mm)
160 - 200 Gal (600 - 750 l)	<100 100 - 200	11.2 in (284 mm) 11.8 in (299 mm)
200 - 300 Gal (750 - 1100 l)	<100	12.8 in (325 mm)

LSA 300

Tank Volume	Fluid Viscosity (cps)	Recommended Blade Diameter
200 - 300 Gal (750 - 1100 l)	<100 100 - 200 200 - 350	15.6 in (396 mm) 17.0 in (432 mm) 18.0 in (457 mm)
300 - 400 Gal (1100 - 1500 l)	<100 100 - 200	18.0 in (457 mm) 19.0 in (483 mm)
400 - 500 Gal (1500 - 1900 l)	<100	19.0 in (483 mm)

STEP 2

Tank Dimensions

Use tank dimension diagrams and blade diameter to determine shaft length.
If Z/T exceeds 1.2, consider using dual impellers.

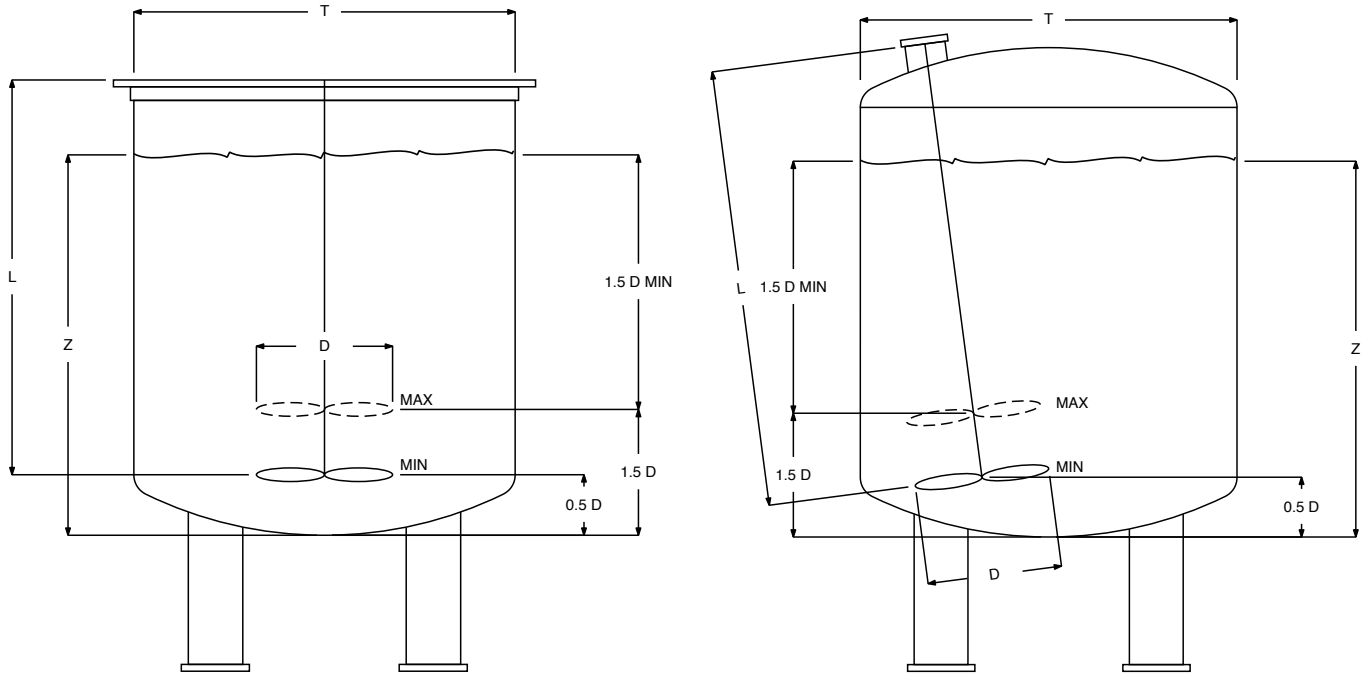

Electric Agitators section continues on next 2 pages

Electric Agitators

STEP 3

Ordering Information

Select your part number Based on your model, blade diameter and shaft length.

Assembly Number	Agitator Model	Motor P/N	Shaft Length "L" in	Shaft Length "L" mm	Shaft P/N	Blade Dia "D" in	Blade Dia "D" mm	Blade P/N
922000	200E	516556	29	737	516910	7.6	193	515770
922005	200E	516556	30	762	516911	7.6	193	515770
922203	200E	516556	31	787	516912	7.6	193	515770
922016	200E	516556	32	813	516913	7.6	193	515770
922022	200E	516556	33	838	516914	7.6	193	515770
922025	200E	516556	34	864	516915	7.6	193	515770
922028	200E	516556	35	889	516916	7.6	193	515770
922032	200E	516556	36	914	516917	7.6	193	515770
922198	200E	516556	29	737	516910	8.8	224	515771
922006	200E	516556	30	762	516911	8.8	224	515771
922010	200E	516556	31	787	516912	8.8	224	515771
922205	200E	516556	32	813	516913	8.8	224	515771
962686	200E	516556	33	838	516914	8.8	224	515771
922208	200E	516556	34	864	516915	8.8	224	515771
922029	200E	516556	35	889	516916	8.8	224	515771
922033	200E	516556	36	914	516917	8.8	224	515771
922001	200E	516556	29	737	516910	10	254	515772
922036	220E	516556	29	737	516910	10	254	515772
922200	200E	516556	30	762	516911	10	254	515772
962553	220E	516556	30	762	516911	10	254	515772
922011	200E	516556	31	787	516912	10	254	515772
922047	220E	516556	31	787	516912	10	254	515772
922017	200E	516556	32	813	516913	10	254	515772
922231	220E	516556	32	813	516913	10	254	515772
922023	200E	516556	33	838	516914	10	254	515772
922059	220E	516556	33	838	516914	10	254	515772
922209	200E	516556	34	864	516915	10	254	515772
962764	220E	516556	34	864	516915	10	254	515772
922210	200E	516556	35	889	516916	10	254	515772
962841	220E	516556	35	889	516916	10	254	515772
922253	220E	516556	36	914	516917	10	254	515772
922002	200E	516556	29	737	516910	11.2	284	515773
922037	220E	516556	29	737	516910	11.2	284	515773
922007	200E	516556	30	762	516911	11.2	284	515773
922043	220E	516556	30	762	516911	11.2	284	515773
922012	200E	516556	31	787	516912	11.2	284	515773
922048	220E	516556	31	787	516912	11.2	284	515773
922206	200E	516556	32	813	516913	11.2	284	515773
962674	220E	516556	33	838	516914	11.2	284	515773
922243	220E	516556	34	864	516915	11.2	284	515773
922249	220E	516556	35	889	516916	11.2	284	515773
962642	220E	516556	36	914	516917	11.2	284	515773
922213	220E	516556	29	737	516910	11.8	300	515774
922219	220E	516556	30	762	516911	11.8	300	515774
922225	220E	516556	31	787	516912	11.8	300	515774
922232	220E	516556	32	813	516913	11.8	300	515774
922238	220E	516556	33	838	516914	11.8	300	515774
922244	220E	516556	34	864	516915	11.8	300	515774
922250	220E	516556	35	889	516916	11.8	300	515774
922254	220E	516556	36	914	516917	11.8	300	515774
922214	220E	516556	29	737	516910	12.8	325	515775
922220	220E	516556	30	762	516911	12.8	325	515775
922226	220E	516556	31	787	516912	12.8	325	515775
922233	220E	516556	32	813	516913	12.8	325	515775
922239	220E	516556	33	838	516914	12.8	325	515775
922245	220E	516556	34	864	516915	12.8	325	515775
922215	220E	516556	29	737	516910	13.6	345	515776
922221	220E	516556	30	762	516911	13.6	345	515776
922227	220E	516556	31	787	516912	13.6	345	515776
922234	220E	516556	32	813	516913	13.6	345	515776
922080	300E	516228	34	864	516915	15.1	384	51A018
922085	300E	516228	34	864	516915	15.1	384	51A018
922090	300E	516228	35	889	516916	15.1	384	51A018

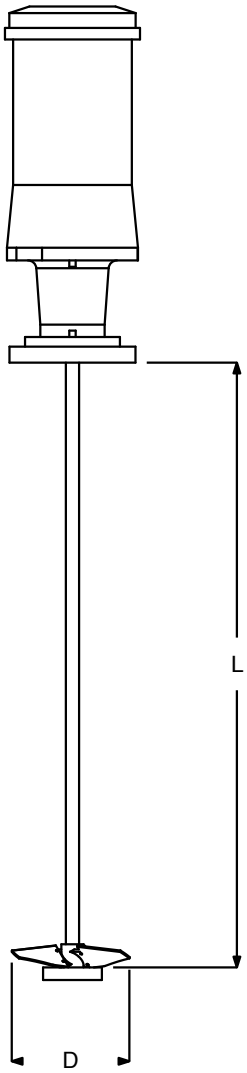

Electric Agitators section continues on next page

Electric Agitators

Ordering Information (continued)

Select your part number Based on your model, blade diameter and shaft length.

Assembly Number	Agitator Model	Motor P/N	Shaft Length "L" in	Shaft Length "L" mm	Shaft P/N	Blade Dia "D" in	Blade Dia "D" mm	Blade P/N
962742	300E	516228	36	914	516920	15.1	384	51A018
922107	300E	516228	37	940	516921	15.1	384	51A018
922116	300E	516228	38	965	516922	15.1	384	51A018
922126	300E	516228	39	991	516923	15.1	384	51A018
922135	300E	516228	40	1016	516924	15.1	384	51A018
922145	300E	516228	41	1041	516925	15.1	384	51A018
96A272	300E	516228	42	1067	516926	15.1	384	51A018
962795	300E	516228	43	1092	516927	15.1	384	51A018
922169	300E	516228	44	1118	516928	15.1	384	51A018
922179	300E	516228	45	1143	516929	15.1	384	51A018
962828	300E	516228	46	1168	516930	15.1	384	51A018
922081	300E	516228	34	864	516915	15.6	396	515777
922091	300E	516228	35	889	516916	15.6	396	515777
922100	300E	516228	36	914	516920	15.6	396	515777
962715	300E	516228	37	940	516921	15.6	396	515777
922117	300E	516228	38	965	516922	15.6	396	515777
922127	300E	516228	39	991	516923	15.6	396	515777
922136	300E	516228	40	1016	516924	15.6	396	515777
922146	300E	516228	41	1041	516925	15.6	396	515777
962730	300E	516228	42	1067	516926	15.6	396	515777
922161	300E	516228	43	1092	516927	15.6	396	515777
922170	300E	516228	44	1118	516928	15.6	396	515777
922180	300E	516228	45	1143	516929	15.6	396	515777
922189	300E	516228	46	1168	516930	15.6	396	515777
922082	300E	516228	34	864	516915	17	432	515778
922092	300E	516228	35	889	516916	17	432	515778
962568	300E	516228	36	914	516920	17	432	515778
922108	300E	516228	37	940	516921	17	432	515778
922118	300E	516228	38	965	516922	17	432	515778
922128	300E	516228	39	991	516923	17	432	515778
922137	300E	516228	40	1016	516924	17	432	515778
922147	300E	516228	41	1041	516925	17	432	515778
962731	300E	516228	42	1067	516926	17	432	515778
922162	300E	516228	43	1092	516927	17	432	515778
922171	300E	516228	44	1118	516928	17	432	515778
922181	300E	516228	45	1143	516929	17	432	515778
922190	300E	516228	46	1168	516930	17	432	515778
922083	300E	516228	34	864	516915	18	457	515779
922093	300E	516228	35	889	516916	18	457	515779
922101	300E	516228	36	914	516920	18	457	515779
922109	300E	516228	37	940	516921	18	457	515779
922119	300E	516228	38	965	516922	18	457	515779
922129	300E	516228	39	991	516923	18	457	515779
922138	300E	516228	40	1016	516924	18	457	515779
922148	300E	516228	41	1041	516925	18	457	515779
922155	300E	516228	42	1067	516926	18	457	515779
922163	300E	516228	43	1092	516927	18	457	515779
922172	300E	516228	44	1118	516928	18	457	515779
922182	300E	516228	45	1143	516929	18	457	515779
922191	300E	516228	46	1168	516930	18	457	515779
922084	300E	516228	34	864	516915	19	483	515780
922094	300E	516228	35	889	516916	19	483	515780
922102	300E	516228	36	914	516920	19	483	515780
922110	300E	516228	37	940	516921	19	483	515780
922120	300E	516228	38	965	516922	19	483	515780
922130	300E	516228	39	991	516923	19	483	515780
922139	300E	516228	40	1016	516924	19	483	515780
922149	300E	516228	41	1041	516925	19	483	515780
922156	300E	516228	42	1067	516926	19	483	515780
922164	300E	516228	43	1092	516927	19	483	515780
922173	300E	516228	44	1118	516928	19	483	515780
922183	300E	516228	45	1143	516929	19	483	515780
922192	300E	516228	46	1168	516930	19	483	515780

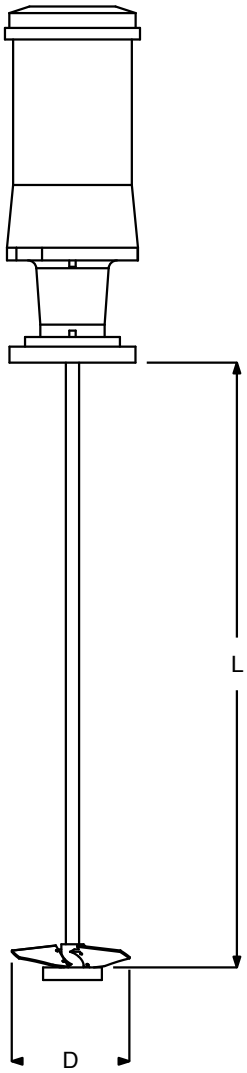

Drum Covers

- Integrate pumps, agitators, and accessories with drum, elevator system, and other containers
- Many mounting options and configurations
- Inspection port for clean and easy monitoring
- Stainless steel construction is compatible with catalyst, waterborne, and other finishing materials
- Create custom solutions with bare cover (238008)

237307

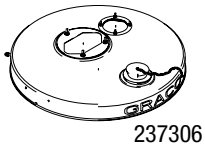
237306

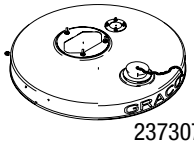
237307

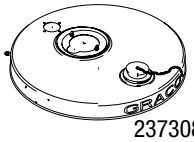
237308

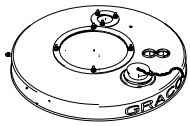
237309

Ordering Information

Part No.	Graco Pump Support	Features	Material	Manual
• 237306	President, Monark, Standard and Fast-Flo	Includes inspection port plug, bolts, nuts, and gaskets. Fits agitator 206758 and siphon tube 206266.	304 SST	308466
• 237307	President and Monark	Includes inspection port plug, bolts, nuts, and gaskets. Fits agitators 204995 and 203711.	304 SST	308466
• 237308	President (two bolt mounting)	Includes inspection port plug, bolts, nuts, and gaskets. Fits agitators 204995, 206219 and filter 214724.	304 SST	308466
• 237309	King, Bulldog, Senator, and President	Includes inspection port plug, bolts, nuts, and gaskets. Fits agitator 205715 and air regulator 207651 (King), and air regulator 205712 (Bulldog).	304 SST	308466
• 237949	Glutton	Features inspection port plug, agitator port; return tube ports, Glutton bolt holes and siphon tube port.	304 SST	308466
• 238008	Most Graco pumps except Premier	Features only inspection port with plug. No other holes. Additional holes cut to fit particular application.	304 SST	308466
• 190206	Most Graco pumps except Premier	Blank cover with no holes. Heavy duty 12 gauge SST. Not passivated.	304 SST	308466
• 238283	Fits agitator 238157	Includes inspection port, return port and mounting holes for agitator.	304 SST	308609

• Waterborne compatible

Elevator System

- Safely and easily raise and lower cover mounted pumps and agitators
- Includes lift, up/down air control, and cover support (cover not included)
- Mounts directly to floor or plate (205339)

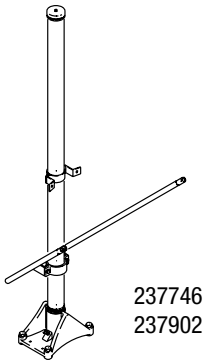

237746
237902

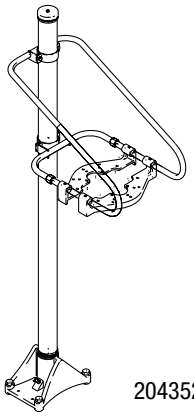

204352

Ordering Information

Part No.	Features	Material	Manual
237746	Includes elevator 204385, air control valve 237579, floor mount base and drum cover support 237578.	Steel	306287
204352	Includes elevator 204385 and bracket 204510.	Steel	306568
207561	Elevator up/down control		306287
204385	Elevator only with stationary base.	Steel	306287

Air Preparation and Controls

Air preparation is key to controlling the finishing process and prolonging the life of finishing equipment. Graco offers a wide range of air preparation equipment to meet all of your finishing needs. Our 3 stage desiccant or membrane drying system allows you to provide dry, clean air to your entire finishing system to achieve a high quality finish.

We also have an extensive range of high quality filter-regulator-lubricators (FRLs) so clean, lubricated air reaches your pneumatic equipment at the correct pressure – regardless of system fluctuations. High quality compressed air is an important asset to any finishing operation. Ensure you are utilizing compressed air to the fullest with Graco Air Preparation Equipment.

Air Preparation and Controls

3-Stage Desiccant Drying System

Air Preparation Systems

- Ensures equipment is supplied with clean, dry air
- Multi-stage filter removes particles down to 0.01 micron
- Desiccant removes moisture from air
- Includes shut-off valve and pressure regulator
- Filter and desiccant indicators signal replacement to ensure optimal efficiency

234401

Ordering Information

Part No.	Description	Air Inlet	Air Outlet	Air Flow Capacity	Max. Operating Pressure
234401	3 stage system includes: 234402., 234403 and 234404				
234402	Stage 1 - Air filter with auto drain, removes water and contaminants down to 5 microns.	1/2 in npt(f)	1/2 in npt(f)	108 CFM	175 psi (1.2 MPa, 12 bar)
234403	Stage 2 - Coalescer with auto drain, removes oil and sub-micronic particles down to .01 microns.	1/2 in npt(f)	1/2 npt(f)	35 CFM	175 psi (1.2 MPa, 12 bar)
234404	Stage 3 - Desiccant housing, removes uncondensed moisture	3/4 in reduced to 1/2 in npt(f)	3/4 in reduced to 1/2 in npt(f)	30 CFM	175 psi (1.2 MPa, 12 bar)

Part Number	Description
288810	Replacement desiccant, 5 lb
288823	Replacement desiccant, 20 lb

Instruction manual: 309921

3-Stage Membrane Drying System

Air Preparation Systems

234418

- Membrane eliminates the cost and maintenance of desiccant systems
- Ensures equipment is supplied with clean, dry air
- Multi-stage filter removes particles down to 0.01 micron
- Membrane removes moisture from air
- Includes shut-off valve and pressure regulator
- Filter indicator signals replacement to ensure optimal efficiency

Ordering Information

Part No.	Description	Air Inlet	Air Outlet	Air Flow Capacity	Max. Operating Pressure
234418	3 stage systems includes 234406, 234397 and 118560				
234406	Stage 1 - Air filter with auto drain, removes water and contaminants down to 5 microns	1/2" npt(f)	1/2" npt(f)	108 CFM	175 psi (1.2 MPa, 12 bar)
234397	Stage 2 - Coalescer with auto drain, removes oil and sub-micronic particles down to .01 microns	1/2" npt(f)	1/2" npt(f)	70 CFM	175 psi (1.2 MPa, 12 bar)
118560	Stage 3 - Membrane air dryer, removes uncondensed moisture	1/2" npt(f)	1/2" npt(f)	30 CFM	175 psi (1.2 MPa, 12 bar)
234394	Self-relieving air regulator	3/8" npt(f)	1/4" npt(f)	100 CFM	160 psi (1.2 MPa, 11 bar)
U22695	Shut off valve				

Instruction manual: 309920

Air Preparation and Controls

Air Control Unit

Air Preparation Systems

- Ensures equipment is supplied with clean, dry air
- Reusable filter removes particles down to 5 microns
- Includes shut-off valve and pressure regulator ideal for controlling atomizing air for one or many spray guns
- Auto-drain eliminates manual emptying of filters

234398 234400

Ordering Information

Part No.	Description	Max. Air Inlet Pressure	Weight	Max. CFM
234398	Air control unit, filtered main air outlet, two regulated outlets (Filter 234396)	160 psi (1.1 MPa, 11 bar)	5 lb 12 oz (2.6 kg)	120 CFM – Filter 50 CFM – Air Regulator
234399	Air control unit, filtered main air outlet with gauge, two regulated outlets (Filter 234396)	160 psi (1.1 MPa, 11 bar)	6 lb 4 oz (2.8 kg)	120 CFM – Filter 50 CFM – Air Regulator
234400	Air control unit, filtered main air outlet with gauge, three regulated outlets (Filter 234396)	160 psi (1.1 MPa, 11 bar)	7 lb 13 oz (3.5 kg)	120 CFM – Filter 50 CFM – Air Regulator
234411	Air control unit, filtered main air outlet, two regulated outlets (Filter 234410)	160 psi (1.1 MPa, 11 bar)	4 lb 13 oz (2.2 kg)	75 CFM – Filter 50 CFM – Air Regulator

Instruction manual: 309923

In-line Air Filters and Coalescers

Air Preparation Systems

- Reusable filter removes particles down to 5 microns
- Coalescer removes contaminants down to 0.01 microns
- Auto-drain eliminates manual emptying of filters
- Built-in filters change indicator signals replacement to ensure optimal efficiency

234408 234405 234409

Ordering Information

Part No.	Description	Air Inlet	Air Outlet	Air Flow Capacity	Maximum Inlet Pressure
234405	Air filter/coalescer assembly (both with auto drain)	1/2" npt (f)	1/2" npt (f)	70 CFM	175 psi (1.2 MPa, 12 bar)
234406	Stage 1 - Air filter with auto drain removes contaminants to 5 microns	1/2" npt (f)	1/2" npt (f)	108 CFM	175 psi (1.2 MPa, 12 bar)
234407	Stage 2 - Coalescer with auto drain removes particles to 0.01 microns	1/2" npt (f)	1/2" npt (f)	70 CFM	175 psi (1.2 MPa, 12 bar)
234408	Air filter with auto drain removes contaminants to 5 microns	3/4" npt (f)	3/4" npt (f)	300 CFM	175 psi (1.2 MPa, 12 bar)
234409	Coalescer with auto drain removes particles to 0.01 microns	3/4" npt (f)	3/4" npt (f)	115 CFM	175 psi (1.2 MPa, 12 bar)

Instruction manual: 309919

Low Pressure Air Regulators

Air Controls

- Accurate pressure regulation for consistent process control
- Lightweight design, ideal for use with spray guns
- Economical solution for air pressure regulation

Ordering Information

Part No.	Description	Inlet	Outlet	Handle	Max. Inlet Pressure	Max. CFM
234389	Air regulator with gauge, self-relieving	1/4" npt (m)	1/4" npt (f)	Knob	160 psi (1.1 MPa, 11 bar)	22 CFM at 50 psi (0.3 MPa, 3.5 bar)
234390	Mini-air regulator	1/4" npt (f)	1/4" npt (f)	Knob	160 psi (1.1 MPa, 11 bar)	22 CFM at 50 psi (0.3 MPa, 3.5 bar)
234391	Air regulator, 2 regulated outlets and 1 non-regulated outlet	3/8" npt (f)	1/4" npt (f)	Tee	175 psi (1.2 MPa, 12 bar)	50 CFM at 100 psi (0.7 MPa, 7 bar)
234392	Air regulator, 3 regulated outlets	3/8" npt (f)	1/4" npt (f)	Tee	175 psi (1.2 MPa, 12 bar)	50 CFM at 100 psi (0.7 MPa, 7 bar)
234393	Air regulator 234391with gauge & shut-off valve, 1 regulated outlet and 1 non-regulated outlet, 0-160 psi (0-1.1MPa, 0-11 bar) gauge	3/8" npt (m)	1/4" npt (f)	Tee	160 psi (1.1 MPa, 11 bar)	50 CFM at 100 psi (0.7 MPa, 7 bar)
234394	Air regulator 234392 with gauge & shut-off valve, 2 regulated outlets, 0-160 psi (0-1.1 MPa, 0-11 bar) gauge	3/8" npt (m)	1/4" npt (f)	Tee	160 psi (1.1 MPa, 11 bar)	50 CFM at 100 psi (0.7 MPa, 7 bar)

Instruction manual 309924.

Air Control System

Air Controls

- Several outlet options for multiple guns in compact package.
- Adjustable pressure ranges for multiple applications with one easy booth control.
- Ideal for supplying clean air to air spray guns and applicators.
- High quality valves and regulators ensure long life and accurate control.

217075

Ordering Information

Part No.	Inlet npt	Outlet npt(m)	Manual
217075	1/2 (f)	Two 1/4 regulated or Two 1/4 unregulated	307476

Air Preparation and Controls

FRL Filter, Regulator, Lubricator

Air Controls

222345

- Cleans, dries, and lubricates air supply to protect and maintain pneumatic equipment
- Includes air filter, regulator, pressure gauge, lubricator, mounting brackets, and fittings
- Ideal for pneumatic pumps like Glutton, President, etc.
- Visual indicator for adjusting lubrication amount

Ordering Information

Part No.	Inlet/ Outlet	Max. WPR psi	Max. WPR bar	Max. WPR MPa	Wetted Parts	Size (w x h x d) in (cm)
222345	1⁄2(f)	250	17.2	1.72	Zinc	15.8 x 13 x 5.0 (40 x 33 x 12.7)

Filters

106150

- Centrifugal filter element removes contaminants and water
- Visual indicator for viewing filter contents

Ordering Information

Part No.	Inlet/ Outlet	Max. WPR psi	Max. WPR bar	Max. WPR MPa	Max CFM at 100 psi (m3/min)	Micron Element	Material	Size (w x h x d) in (cm)
106150	3⁄4(fxf)	250	17.2	1.72	250 (7.0)	40	Zinc-plated	4.0 x 8.8 x 7.8 (10 x 22 x 20)
112859	1(fxf)	250	17.2	1.72	350 (10.0)	40	Zinc-plated	4.5 x 8.8 x 7.9 (12 x 22 x 20)
217074	1⁄2(fxf)	250	17.2	1.72	106 (3.0)	40	Zinc-plated	3.0 x 7.5 x 6.6 (7.6 x 19 x 17)

Air Preparation and Controls

Lubricators

- Lubricator automatically adds lubricant to air line
- Control know adjusts lubrication amount
- Sight window for viewing and adjusting droplet size

214848

Ordering Information

Part No.	Inlet/ Outlet	Max. WPR psi	Max. WPR bar	Max. WPR MPa	Material	Size (w x h x d) in (cm)	Bowl Capacity
214848	1/2(f)	250	17.2	1.72	Zinc	3.3 x 7.9 (8.3 x 20)	8 oz (0.24 l)
214849	3/4(f)	250	17.2	1.72	Zinc	4.0 x 9.9 (10.3 x 25.1)	16 oz (0.5 l)

Regulators

- Multiple outlets for connecting equipment, gauges, or ball valves
- Accurate adjustment of air pressure for process control

110318

104266

Ordering Information

Bare Part No.	Assembly Part No.	Inlet/ Outlet	Gauge Ports (npt)	Regulated Pressure psi	Regulated Pressure bar	Regulated Pressure MPa	Max CFM at 100 psi (m3/min)	Material
104266		1/2(f)	1/4(f)	0-250	0-17.2	0-1.72	90 (2.5)	Zinc-plated
	203716	1/2 90° swivel(f) x 3/8(m)						
	202858	1/2 swivel(f) x 3/8(f)						
	202156	1/2 x 3/8 bushing, gauge						
	223815	1/2 swivel, ball valve, gauge (also order nipple 162505)						
171937		1/2(f)	1/4(f)	0-250	0-17.2	0-1.72	90 (2.5)	Zinc-plated
104815		1/8(f)	1/8(f)	0-60	0-4.1	0-0.41	15 (0.4)	Zinc-plated
110318		1/4(f)	1/8(f)	0-180	0-12.4	0-1.24	15 (0.4)	Zinc-plated
	110147	1/4(f)						

Pressure Regulators

Precise fluid control is crucial to any finishing process. Graco has a proven line of fluid pressure regulators to meet all of your finishing needs. Our experience provides us unique insight in to the ideal fluid pressure regulator for a wide array of finishing applications and materials.

Fluid Regulator

Fluid pressure regulators control pressure of the downstream fluid, allowing operators to accurately control the pressure to guns, applicators and dispense valves. This ensures the process is stable and maintains the optimal conditions needed for a smooth paint finish, consistent extrusion or steady flow. Graco fluid regulators are designed with wear resistant materials for long life, even when using harsh materials. With decades of experience and continuous improvement, Graco has created some of the most reliable, high performance regulators in the industry.

Back Pressure Regulator

Control upstream fluid pressure with Graco back pressure regulators. Our back pressure regulators use closed loop control to maintain the pressure of the system regardless of flow demand. This allows operators to trigger guns, valves, and other flow controls without changing the system pressure.

Pressure Regulators Product Matrix

		Part Number	Max Pressure psi (bar)	Regulated Pressure psi (bar)	Max Delivery gpm (lpm)	Wetted Parts	Type	Inlet/ Outlet	Gauge Port	Includes Gauge
Low Pressure 0-160 psi (0-11 bar)		24E472	1-30 (0,06-2,0)			SST	Air	1/4 M 1/4 F		
		24E471	1-50 (0,06-3,4)			SST	Air	1/4 M 1/4 F		
		24C375	1-90 (0,06-6,2)			SST	Air	1/4 M 1/4 F		
		236449	100 (7)	3-30 (0,2-2)	0,5 (1,9)	Acetal	Manual	1/4 F 1/4 F	1/4 F	Yes
		241976	100 (7)	3-30 (0,2-2)	0,5 (1,9)	Acetal	Air	1/4 F 1/4 F	1/4 F	No
		236281	100 (7)	3-100 (0,2-7)	0,5 (1,9)	Acetal	Manual	1/4 F 1/4 M	1/4 F	Yes
		236216	100 (7)	20-100 (1-7)	0,5 (1,9)	Acetal	Manual	1/4 F 1/4 F	1/4 F	Yes
		236450	100 (7)	20-100 (1-7)	0,5 (1,9)	Acetal	Manual	1/4 F 1/4 F	1/4 F	Yes
		214980	250 (17,5)	0-30 (0-2)	3,0 (11,3)	SST	Air	3/8 F 3/8 F	1/4 F	No
		214895	250 (17,5)	5-100 (0-7)	3,0 (11,3)	SST	Manual	3/8 F 3/8 F	1/4 F	No
		214706	250 (17,5)	5-100 (0-7)	3,0 (11,3)	SST	Manual	3/8 F 3/8 F	1/4 F	Yes
		222115	250 (17,5)	20-160 (1-11)	3,0 (11,3)	SST	Manual	3/8 F 3/8 F	1/4 F	Yes
		217314	250 (17,5)	20-160 (1-11)	3,0 (11,3)	SST	Manual	3/8 F 3/8 F	1/4 F	Yes
		221118	250 (17,5)	20-160 (1-11)	3,0 (11,3)	SST	Manual	3/8 F 3/8 F	1/4 F	Yes
High Pressure 150-5000 psi (10-344 bar)		222121	1500 (103)	150-1200 (10-83)	1,0 (3,7)	SST	Manual	1/4 F 1/4 F	-	No
		240197	1500 (103)	150-1200 (10-83)	1,0 (3,7)	SST	Manual	1/4 F 1/4 F	1/4 F	Yes
		240198	1500 (103)	150-1200 (10-83)	1,0 (3,7)	SST	Manual	1/4 F 1/4 F	1/4 F	Yes
		217576	3000 (206)	200-1000 (13-69	3,5 (13,2)	CS	Manual	3/8 F 1/4 F	1/4 F	Yes
		206661	3000 (206)	1000-3000 (69-206)	3,5 (13,2)	CS	Manual	3/8 F 3/8 F	1/4 F	No
		238889	6000 (413)	500-3000 (34-206)	1,0 (3,7)	SST	Manual	3/8 F 3/8 F	1/4 F	Yes
		238890	6000 (413)	500-3000 (34-206)	1,0 (3,7)	SST	Manual	3/8 F 3/8 F	1/4 F	No
		238893	6000 (413)	500-4000 (34-275)	1,0 (3,7)	SST	Air	3/8 F 3/8 F	1/4 F	Yes
		238894	6000 (413)	500-4000 (34-275)	1,0 (3,7)	SST	Air	3/8 F 3/8 F	1/4 F	No
		238891	6000 (413)	3000-5000 (206-344)	1,0 (3,7)	SST	Manual	3/8 F 3/8 F	1/4 F	Yes
		238892	6000 (413)	3000-5000 (206-344)	1,0 (3,7)	SST	Manual	1-1/4 F 1-1/4 F	1/4 F	Yes
Back Pressure 0-250 psi (0-17 bar)		208997	180 (12)	0-180 (0-12)	15 (56,7)	SST	Manual	1-1/4 F 1-1/4 F	1/4 F	Yes
		916154	180 (12)	0-180 (0-12)	15 (56,7)	SST, Carbide	Manual	1-1/4 F 1-1/4 F	1/4 F	Yes
		903508	180 (12)	0-180 (0-12)	15 (56,7)	SST	Manual	3/8 M 3/8 F	1/4 F	Yes
		205122	180 (12)	0-180 (0-12)	2,0 (7,5)	CS	Manual	3/8 M 3/8 F	1/4 F	Yes
		237503	180 (12)	5-180 (0-12)	4,3 (16,2)	SST	Manual	3/8 M 3/8 F	1/4 F	No
		236770	180 (12)	5-180 (0-12)	4,3 (16,2)	SST	Manual	3/8 M 3/8 F	1/4 F	Yes
		206019	180 (12)	0-180 (0-12)	15,0 (56,7)	Aluminum	Manual	1 F 1 F	1/4 F	Yes
		224486	300 (20,7)	5-180 (0,3-12)	20 (75)	SST, Acetal and PTFE	Manual	1-1/2 F	1/4 npt(f)	Yes
		223824	300 (20,7)	5-180 (0,3-12)	20 (75)	SST, Acetal and PTFE	Manual	2 in Sanitary	1/3 npt(f)	Yes
		288117	300 (20,7)	25-250 (1,7-17)	20 (75)	SST, Acetal and PTFE	Air	1-1/4 F	1/4 npt(f)	Yes
		288311	300 (20,7)	25-250 (1,7-17)	20 (75)	SST, Acetal and PTFE	Air	1-1/2 F	1/4 npt(f)	Yes
		288262	300 (20,7)	25-250 (1,7-17)	20 (75)	SST, Acetal and PTFE	Air	2 in Sanitary	1/4 npt(f)	Yes

Low Pressure

Fluid Pressure Regulator

- Stainless steel wetted materials are compatible with catalyst and waterborne materials
- Removable adjustment key eliminates operator interference
- Manual quick flush mode ensures easy cleaning without impacting production settings
- Air operated model (214980) provides easy automation opportunities
- Low shear model (222115) uses laminar diaphragm valve to reduce material degradation and color matching issues, especially with metallic paint
- Tungsten and carbide materials ensure low wear and long life
- PTFE/Elastomer hybrid diaphragm withstands wear while maintaining accurate responsiveness

214980 214706 222115

Ordering Information

Part No.	Max Pressure psi (bar)	Regulated Pressure psi (bar)	Max Delivery gpm (lpm)	Max Viscosity in CPS	Wetted Parts	Type	Inlet/ Outlet	Gauge Port	Gauge Included
214980	250 (17.5)	0-30 (0-2)	3.0 (11.3)	1000	SST	Air	3/8 F 3/8 F	1/4 F	Yes
222115	250 (17.5)	20-160 (1-11)	3.0 (11.3)	300	SST	Spring	3/8 F 3/8 F	1/4 F	Yes
214895	250 (17.5)	5-100 (0-7)	3.0 (11.3)	1000	SST	Spring	3/8 F 3/8 F	1/4 F	No
214706	250 (17.5)	5-100 (0-7)	3.0 (11.3)	1000	SST	Spring	3/8 F 3/8 F	1/4 F	Yes
217314	250 (17.5)	20-160 (1-11)	3.0 (11.3)	1000	SST	Spring	3/8 F 3/8 F	1/4 F	Yes
221118	250 (17.5)	20-160 (1-11)	3.0 (11.3)	1000	SST	Spring	3/8 F 3/8 F	1/4 F	No

Instruction manual 307212

Low Pressure Lightweight Composite

Fluid Pressure Regulator

- Lightweight composite material is compatible with waterborne materials
- PTFE, stainless steel seat, and carbide ball provide wear resistance
- Air operated model (241976) provides easy automation opportunities
- Pressure adjustment key with locking mechanism protects production settings

236449

Ordering Information

Part No.	Max Pressure psi (bar)	Regulated Pressure psi (bar)	Max Delivery gpm (lpm)	Max Viscosity in CPS	Wetted Parts	Type	Inlet/ Outlet	Gauge Port	Gauge Included
236449	100 (7)	3-30 (0.2-2)	0.5 (1.9)	1000	Acetal	Spring	1/4 F 1/4 F	1/4 F	Yes
241976	100 (7)	3-30 (0.2-2)	0.5 (1.9)	1000	Acetal	Air	1/4 F 1/4 F	1/4 F	No
236281	100 (7)	3-100 (0.2-7)	0.5 (1.9)	1000	Acetal	Spring	1/4 F 1/4 M	1/4 F	Yes
236216	100 (7)	20-100 (1-7)	0.5 (1.9)	1000	Acetal	Spring	1/4 F 1/4 F	1/4 F	No
236450	100 (7)	20-100 (1-7)	0.5 (1.9)	1000	Acetal	Spring	1/4 F 1/4 F	1/4 F	Yes

Composite construction. Instruction manual 308325

Precision Flow

Fluid Pressure Regulator

- Spring-less fluid path reduces maintenance and internal material build up
- Stainless steel wetted materials are compatible with catalyst and waterborne materials
- Air operated control for easy automation integration
- High-flow bypass provides quick flushing capabilities without adjusting production settings
- Compact and lightweight design saves space and reduces payload for robot integration

24C375 24E471 24E472

Ordering Information

Part No.	Max Pressure psi (bar)	Regulated Pressure Ratio	Ratio Spacer	Wetted Parts	Type	Inlet/ Outlet
24C375	1-90 (0.06-6.2)	1:1	Silver	SST	Air	1/4 M 1/8 F
24E471	1-50 (0.06-3.4)	1:2	Green	SST	Air	1/4 M 1/8 F
24E472	1-30 (0.06-2.0)	1:3	Black	SST	Air	1/4 M 1/8 F

Instruction manual 3A0427

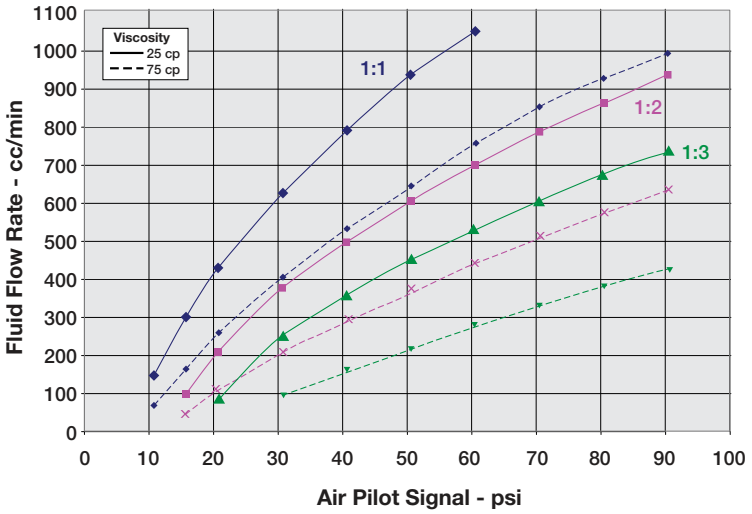

Test conditions: 90 psi fluid inlet, 1.0 mm nozzle, 10 ft 1/4 ID hose

Pressure Regulators

High Pressure Corrosion Resistant

Fluid Pressure Regulator

- Stainless steel wetted materials are compatible with catalyst and waterborne materials
- Air operated model (241976) provides easy automation opportunities
- Tungsten and carbide materials ensure low wear and long life
- Valve cartridge for quick cleaning and replacement – reduce downtime
- Glycerin filled gauge for accurate pressure reading

238889

238893

Ordering Information

Part No.	Max Pressure psi (bar)	Regulated Pressure psi (bar)	Max Delivery gpm (lpm)	Max Viscosity in CPS	Wetted Parts	Type	Inlet/ Outlet	Gauge Port	Gauge Included
238889	6000 (413)	500-3000 (34-206)	1.0 (3.7)	15000	SST	Spring	3⁄8 F 3⁄8 F	1/4 F	No
238890	6000 (413)	500-3000 (34-206)	1.0 (3.7)	15000	SST	Spring	3⁄8 F 3⁄8 F	1/4 F	Yes
238891	6000 (413)	3000-5000 (206-344)	1.0 (3.7)	15000	SST	Spring	3⁄8 F 3⁄8 F	1/4 F	No
238892	6000 (413)	3000-5000 (206-344)	1.0 (3.7)	15000	SST	Spring	3⁄8 F 3⁄8 F	1/4 F	Yes
238893	6000 (413)	500-4000 (34-275)	1.0 (3.7)	15,000	SST	Air	3⁄8 F 3/8 F	1/4 F	No
238894	6000 (413)	500-4000 (34-275)	1.0 (3.7)	15,000	SST	Air	3⁄8 F 3/8 F	1/4 F	Yes

Easy flush plug available. Instruction manual 308647.

High Pressure Corrosion Resistant Mini

Fluid Pressure Regulator

- Stainless steel wetted materials are compatible with catalyst and waterborne materials
- Pressure adjustment key with locking mechanism protects production settings
- Valve cartridge for quick cleaning and replacement – reduce downtime
- Compact and lightweight design saves space and reduces payload for spray packages
- Tungsten and carbide materials ensure low wear and long life

222121

Ordering Information

Part No.	Max Pressure psi (bar)	Regulated Pressure psi (bar)	Max Delivery gpm (lpm)	Max Viscosity in CPS	Wetted Parts	Type	Inlet/ Outlet	Gauge Port	Gauge Included
222121	1500 (103)	150-1200 (10-83)	1.0 (3.7)	500	SST	Spring	1/4 F 1/4 F	–	No
240197	1500 (103)	150-1200 (10-83)	1.0 (3.7)	500	SST	Spring	1/4 F 1/4 F	1/4 F	Yes
240198	1500 (103)	150-1200 (10-83)	1.0 (3.7)	500	SST	Spring	1/4 F 1/4 F	1/4 F	Yes

Unique bottom replaceable cartridge. Instruction manual 307886.

High Pressure

Fluid Pressure Regulator

- Tungsten and carbide materials ensure low wear and long life
- Plated carbon steel housing is compatible with solvent-borne materials
- Laser-marked indication lines for easy pressure adjustment and process control
- Ergonomic adjustment knob

217576

Ordering Information

Part No.	Max Pressure psi (bar)	Regulated Pressure psi (bar)	Max Delivery gpm (lpm)	Max Viscosity in CPS	Wetted Parts	Type	Inlet/ Outlet	Gauge Port	Gauge Included
217576	3000 (206)	200-1000 (13-69)	3.5 (13.2)	500	CS	Spring	3⁄8 F 1/4 F	1/4 F	Yes
206661	3000 (206)	1000-3000 (69-206)	3.5 (13.2)	500	CS	Spring	3⁄8 F 1/4 F	1/4 F	Yes

Airless, solvent based systems. Instruction manual 306878.

Low Pressure Corrosion Resistant

Fluid Back Pressure Regulator (BPR)

- Stainless steel wetted materials are compatible with catalyst and waterborne materials
- Hardened stainless steel seat ensure low wear and long life
- PTFE/Elastomer hybrid diaphragm withstands wear while maintaining accurate responsiveness
- Large orifice accommodates high volume flow rates
- Air operated models available for automated control, Conversion kit (15J498)

208997

Ordering Information

Part No.	Max Pressure psi (bar)	Regulated Pressure psi (bar)	Max Delivery gpm (lpm)	Max Viscosity in CPS	Wetted Parts	Type	Inlet/ Outlet	Gauge Port	Gauge Included
208997	180 (12)	0-180 (0-12)	15.0 (56.7)	1000	SST	Spring	1-1/4 F 1-1/4 F	1/4 F	Yes
916154	180 (12)	0-180 (0-12)	15.0 (56.7)	1000	SST, Carbide	Spring	1-1/4 F 1-1/4 F	1/4 F	Yes
903508	180 (12)	0-180 (0-12)	15.0 (56.7)	1000	SST	Spring	1 F 1-1/4 F	1/4 F	Yes

Instruction manual 307107.

Conversion kit 15J498 - converts a 208997 spring operated back pressure regulator to a pneumatic back pressure regulator.

Repair kit 15J820 - diaphragm repair kit with standard stainless steel seat.

Repair kit 15J822 - carbide repair kit for back pressure regulator.

Low Pressure Mini

Fluid Back Pressure Regulator (BPR)

- Stainless steel wetted materials are compatible with catalyst and waterborne materials
- Tungsten and carbide materials ensure low wear and long life
- Compact and lightweight design saves space and reduces payload for small circulation systems
- PTFE/Elastomer hybrid diaphragm withstands wear while maintaining accurate responsiveness
- Air operated model available for automated control, Conversion kit (237448)

205122

Ordering Information

Part No.	Max Pressure psi (bar)	Regulated Pressure psi (bar)	Max Delivery gpm (lpm)	Max Viscosity in CPS	Wetted Parts	Type	Inlet/ Outlet	Gauge Port	Gauge Included
205122	180 (12)	0-180 (0-12)	2.0 (7.5)	1000	CS	Spring	3⁄8 M 3/8 F	1/4 F	Yes
237503	180 (12)	5-180 (0-12)	4.3 (16.2)	1000	SST	Spring	3⁄8 M 3/8 F	1/4 F	No
236770	180 (12)	5-180 (0-12)	4.3 (16.2)	1000	SST	Spring	3⁄8 M 3/8 F	1/4 F	Yes

Instruction manual 308401.

Air Operated Corrosion Resistant

Fluid Back Pressure Regulator (BPR)

- PTFE/Elastomer hybrid diaphragm withstands wear while maintaining accurate responsiveness
- Stainless steel wetted materials are compatible with catalyst and waterborne materials
- Hardened stainless steel seat ensure low wear and long life
- Large orifice accommodates high volume flow rates
- Air operated for remote automated control to eliminate operator interference
- Implement sleep mode to reduce pump energy consumption during non-production

288262

Ordering Information

Part No.	Max Pressure psi (bar)	Regulated Pressure psi (bar)	Max Delivery gpm (lpm)	Max Viscosity in CPS	Wetted Parts	Type	Inlet/ Outlet	Gauge Port	Gauge Included
288117	300 (20.7)	25-250 (1.7-17)	20 (75)	1000	SST, Acetal and PTFE	Air	1-1/4 npt(f)	1/4 npt(f)	Yes
288311	300 (20.7)	25-250 (1.7-17)	20 (75)	1000	SST, Acetal and PTFE	Air	1-1/2 npt(f)	1/4 npt(f)	Yes
288262	300 (20.7)	25-250 (1.7-17)	20 (75)	1000	SST, Acetal and PTFE	Air	2 in Sanitary	1/4 npt(f)	Yes

Part Number	Description
15J498	Conversion kit - coverts a 208997 spring operated back pressure regulator to a pneumatic back pressure regulator
15J820	Diaphragm repair kit with standard stainless steel seat
15J821	High-Flo diaphragm repair kit with standard stainless steel seat
15J822	Diaphragm repair kit with standard carbide seat

Instruction manual 311595.

Low Shear Corrosion Resistant

Fluid Back Pressure Regulator (BPR)

- Stainless steel membrane diaphragm is highly wear resistant while maintaining accurate responsiveness
- Low Shear diaphragm valve has minimal restriction to reduce material degradation and color matching issues, especially with metallic paint
- Stainless steel wetted materials are compatible with catalyst and waterborne materials
- Large fluid passages to accommodate high volume flow rates

223824

Ordering Information

Part No.	Max Pressure psi (bar)	Regulated Pressure psi (bar)	Max Delivery gpm (lpm)	Max Viscosity in CPS	Wetted Parts	Type	Inlet/ Outlet	Gauge Port	Gauge Included
224486	300 (20.7)	5-180 (0.3-12)	20 (75)	1000	SST, Acetal and PTFE	Spring	1-1/2 F	1/4 F	Yes
223824	300 (20.7)	5-200 (0.3-13)	20(75)	1000	SST, Acetal and PTFE	Spring	2 in Sanitary	1/4 F	Yes

Instruction manual 308115.

Low Pressure

Fluid Back Pressure Regulator (BPR)

- Electroless nickel plated aluminum housing with smooth flow orifices
- Tungsten and carbide materials to resist wear
- PTFE/Elastomer hybrid diaphragm withstands wear while maintaining accurate responsiveness
- Compatible with solvent-borne materials

206019

Ordering Information

Part No.	Max Pressure psi (bar)	Regulated Pressure psi (bar)	Max Delivery gpm (lpm)	Max Viscosity in CPS	Wetted Parts	Type	Inlet/ Outlet	Gauge Port	Gauge Included
206019	180 (12)	0-180 (0-12)	15.0 (56.7)	1000	Alum	Spring	1 F 1 F	1/4 F	Yes

Instruction manual 306770.

High Pressure

Fluid Back Pressure Regulator (BPR)

- Tungsten and carbide materials ensure low wear and long life
- Plated carbon steel housing is compatible with solvent-borne materials
- Laser-marked indication lines for easy pressure adjustment and process control
- Ergonomic adjustment knob

222405

Ordering Information

Part No.	Max Pressure psi (bar)	Regulated Pressure psi (bar)	Max Delivery gpm (lpm)	Max Viscosity in CPS	Wetted Parts	Type	Inlet/ Outlet	Gauge Port	Gauge Included
222405	3000 (207)	0-1000 (0-69)	3.5 (13.3)	500	CS	Spring	1/4 F 1/4 F	1/4 F	No
206819	3000 (207)	5-180 (0-12)	3.5 (13.3)	500	CS	Spring	1/4 F 1/4 F	1/4 F	No
238926	3000 (207)	5-180 (0-12)	3.5 (13.3)	500	SST	Spring	1/4 F 1/4 F	1/4 F	No

High pressure, solvent coatings. Instruction manual 306860.

Gun-Mounted Fluid Pressure Regulator

Gun Regulator

- Stainless steel materials are compatible with catalyst and waterborne materials
- PTFE/Elastomer hybrid diaphragm withstands wear while maintaining accurate responsiveness
- Easy and accurate pressure adjustment at the gun to fine tune pressure settings during production
- Connects quickly to spray guns using twistlock connector
- Circulate materials though the regulator to ensure a uniform fluid suspension and eliminate material stagnation

Ordering Information

Part No.	Inlet/ Outlet	Max. Inbound Fluid psi	Max. Inbound Fluid bar	Max. Inbound Fluid MPa	Regulated Pressure psi	Regulated Pressure bar	Regulated Pressure MPa	Max Delivery gpm	Max Delivery lpm	Wetted Parts
223621	1⁄4 npsm(m)	300	21	2.1	0-300	0-21	0-2.1	1	3.8	SST

Note: 3⁄8 twistlock outlet to gun. Regulator to gun fitting 223628 twistlock.
Regulator type: adjustable restrictor. Instruction manual 307751.

Part No.	Inlet/ Outlet	Max. Inbound Fluid psi	Max. Inbound Fluid bar	Max. Inbound Fluid MPa	Regulated Pressure psi	Regulated Pressure bar	Regulated Pressure MPa	Wetted Parts
208082	1⁄4 npsm(m)	200	14	1.4	5-35	0.3-2.4	0.03-0.24	SST

Note: 208085 regulator to gun fitting. Circulating spring-mounted gun mount. Viscosity range up to 500 cps.
Note: To convert from standard Buna-N diaphragm to PTFE, order 185028 PTFE diaphragm and 168880 Mylar backing diaphragm to replace standard Buna-N and nylon diaphragm. Instruction manual 307016.

Part No.	Inlet/ Outlet	Max. Inbound Fluid psi	Max. Inbound Fluid bar	Max. Inbound Fluid MPa	Regulated Pressure psi	Regulated Pressure bar	Regulated Pressure MPa	Wetted Parts
223622	3⁄8 npsm(f)	200	14	1.4	5-35	0.3-2.4	0.03-0.24	SST

Note: Regulator to gun fitting 223628 twistlock. Direct to gun fitting. Instruction manual 307016.

Part No.	Inlet/ Outlet	Max. Inbound Fluid psi	Max. Inbound Fluid bar	Max. Inbound Fluid MPa	Regulated Pressure psi	Regulated Pressure bar	Regulated Pressure MPa	Wetted Parts
223623	3⁄8 twistlock	200	14	1.4	5-35	0.3-2.4	0.03-0.24	SST

Note: Regulator to gun fitting 223628 twistlock. Instruction manual 307016.

Tamper-Resistant Circulating Restrictor Valves

Gun Regulator

- Manually adjust flow settings at the gun
- Tamper resistant adjustment knob to eliminate operator interference
- Circulate materials though the valve to ensure a uniform fluid suspension and eliminate material stagnation
- Stainless steel materials are compatible with catalyst and waterborne materials
- PTFE/Elastomer hybrid diaphragm withstands wear while maintaining accurate responsiveness
- Connects quickly to spray guns using twistlock connector

Ordering Information

Part No.	Inlet/ Outlet	Max. Inbound Fluid			Regulated Pressure			Max Delivery		Wetted Parts
		psi	bar	MPa	psi	bar	MPa	gpm	lpm	
223617	1⁄4 npsm(m)	300	21	2.1	0-300	0-21	0-2.1	1	3.8	SST

Note: 3⁄8 twistlock outlet to gun. Regulator to gun fitting 223628 twistlock.
Regulator type: adjustable restrictor. Instruction manual 307751.

Part No.	Inlet/ Outlet	Max. Inbound Fluid			Regulated Pressure			Max Delivery		Wetted Parts
		psi	bar	MPa	psi	bar	MPa	gpm	lpm	
223618	3/8 npsm(m)	300	21	2.1	0-300	0-21	0-2.1	1	3.8	SST

Note: up to 1000 cps viscosity. Instruction manual 307751.

Part No.	Inlet/ Outlet	Max. Inbound Fluid			Regulated Pressure			Max Delivery		Wetted Parts
		psi	bar	MPa	psi	bar	MPa	gpm	lpm	
223619	1/4 npsm(m)	300	21	2.1	0-300	0-21	0-2.1	1	3.8	SST

Note: 3/8 npsm(f) swivel. Instruction manual 307751.

Part No.	Inlet/ Outlet	Max. Inbound Fluid			Regulated Pressure			Max Delivery		Wetted Parts
		psi	bar	MPa	psi	bar	MPa	gpm	lpm	
223620	3/8 npsm(m)	300	21	2.1	0-300	0-21	0-2.1	1	3.8	SST

Note: 3/8 npsm(f) coupler. Instruction manual 307751.

*Note: Restrictor valves require tool 220102 to adjust. *All models are waterborne compatible.*

Quick Couplers

Other Accessories

- Stainless Steel and PTFE materials are compatible with finishing materials
- Quick couplers automatically seal once disconnected
- Quickly change between guns, regulators, and lines to reduce setup, changeover, and maintenance time
- Don't flush through guns tips, disconnect and flush through quick connects. Reduce flushing time and avoid premature tip wear.
- Provide flexibility for operators, especially those that own or maintain their own guns. Promote daily maintenance.
- Compatible with Graco Gun Regulators and Restrictors

Ordering Information

Part No.	Inlet/Outlet	Maximum WPR psi	Maximum WPR bar	Maximum WPR MPa	Inlet & Return Ports	Outlet	Material	Manual
• 223627	Coupler stern	200	14	1.4	Twistlock (m)	3/8 npsm (f)	SST	307016
• 223624	Straight adapter	200	14	1.4	3/8 npsm (m)	Twistlock (f)	SST	307016
• 223625	Straight adapter	300	20.7	2.07	3/8 npsm (m)	Twistlock (f)	SST	307016
• 223628	Coupler stern	300	20.7	2.07	Twistlock (m)	3/8 npsm (f)	SST	307016

Surge Suppressors

Surge Suppressors are a simple and reliable way to reduce pulsation and assure smooth fluid transfer throughout your finishing system. Graco surge suppressors were designed specifically for the finishing industry from decades of pump technology research. The streamlined fluid path ensures low shear, smooth fluid flow, and superior flush ability.

High Flow Surge Suppressors

- Reduces pulsation for consistent material delivery and uniform spray pattern
- Stainless steel and PTFE materials are compatible with many finishing materials
- In-line flow configuration is easy to flush, making color changes quick and easy
- Multiple fluid connection options accommodate global system requirements
- Ideal for large, high flow rate systems

238986

Ordering Information

Part No.	Description	Inlet/ Outlet npt	Maximum WPR psi	bar	MPa	Max. Delivery gpm	lpm	Material	Manual
238986	Surge Tank	2	300	21	2.1	20	76	SST, PTFE	307707
238987	High-Flo Surge Tank	2*	300	21	2.1	20	76	SST, PTFE	307707
238988	High-Flo Surge Tank	1-1⁄2*	300	21	2.1	20	76	SST, PTFE	307707
218509	High-Flo Surge Tank	2*	600	42	4.2	20	76	Carbide, SST UHMWPE, Viton PTFE	307707

*Sanitary Tri-Clamp compatible
Note: Maximum flow rates are recommended maximums for peak performance. Exceeding these values reduces the surge tanks ability to dampen pulsation.

In-line Surge Suppressor

- Stainless steel and PTFE materials are compatible with many finishing materials
- Reduces pulsation for consistent material delivery and uniform spray pattern
- In-line flow configuration is easy to flush, making color changes quick and easy

220157

Ordering Information

Part No.	Inlet/ Outlet npt	Maximum Inbound Fluid psi	bar	MPa	Max. Delivery gpm	lpm	Wetted Parts	Manual
220157	1 x 1-1/4 npt(f)	600	42	4.2	15	57	Carbine, SST, UHMWPE, Viton, PTFE	307707

Tee Surge Suppressor

- Stainless steel and PTFE materials are compatible with many finishing materials
- Reduces pulsation for consistent material delivery and uniform spray pattern
- Isolate the surge tank and perform on-line maintenance with tee configuration

233736

Ordering Information

Part No.	Inlet/ Outlet npt	Maximum Inbound Fluid psi	bar	MPa	Wetted Parts	Manual
• 233736	3/4 BSPP(f)	360	25	2.5	SST, PTFE	307707

• Waterborne compatible

Filters

Safe guard your process by removing contaminates from your circulation line. Graco has a high quality filter solution for a wide range of pressure and flow rates.

Bag Filter

Bag filters are a great solution for filtering high volumes of liquid. They are simple, economical, and effective. This filter works well in conjunction with any of our high quality, high volume pumps. Graco's high capacity filters extend the time between filter changes which is ideal for large circulation systems in which downtime is not an option.

Red Alert

Red Alert filters are a unique filtering option. The integrated Red Alert Pop Up Indicator signals the user that it is time to change the filter. This minimizes operator error and the need for check sheets or maintenance schedules. It also keeps filters from clogging and ensures your operation runs more efficiently.

High Pressure

Graco's high pressure filter is ideal for high or low pressure finishing applications to reduce material usage during flushing to save you money. The design also resists wear and damage from even the most corrosive and abrasive materials. Whether used on a spray package, a 2K catalyst system or circulation out-feed, this versatile filter won't let you down.

Stainless Steel High Pressure Filter

Filters

- Compatible with catalyst and waterborne materials
- Many porting options for different gauge, drain valve, and fluid line options
- Compact size is ideal for spray packages

223160

Ordering Information

Part No.	Description	Area/sq. in	Area/sq. cm	Mesh	Inlet/ Outlet npt	Maximum WPR psi	Maximum WPR bar	Maximum WPR MPa	Material	Manual
• 223160	Filter assembly	18	116	60	3/8(f) 1/4(m)	5000	345	34.5	304, 316 SST	307273

Replacement Screen Elements

25-Count Carton Part No.	3-Pack Part No.	Area/sq. in	Area/sq. cm	Mesh	Material
• 238436	238435	18	116	30	SST
• 238438	238437	18	116	60	SST
• 238440	238439	18	116	100	SST
• 238442	238441	18	116	200	SST

High Pressure Red Alert Filter

Filters

- Red Alert indicator signals filter element replacement to ensure efficient filtration
- Large flow capacity is ideal for large circulation and supply systems
- Integrated mounting holes make installation to frame and equipment easy
- Bottom port for installing quick flush ball valve

210090

Ordering Information

Part No.	Area/sq. in	Area/sq. cm	Mesh	Inlet/ Outlet npt	Maximum WPR psi	Maximum WPR bar	Maximum WPR MPa	Max. Delivery gpm	Max. Delivery lpm	Material	Manual
210090	36	232	60	3/4	3000	207	20.7	10	38	CS	307252
210091	36	232	100	3/4	3000	207	20.7	10	38	CS	307252
210092	36	232	200	3/4	3000	207	20.7	10	38	CS	307252
207994	225	1451	30	1-1/4	3000	207	20.7	20	75	CS	306987
207995	225	1451	60	1-1/4	3000	207	20.7	20	75	CS	306987
207996	225	1451	100	1-1/4	3000	207	20.7	20	75	CS	306987
207997	225	1451	150	1-1/4	3000	207	20.7	20	75	CS	306987
207998	225	1451	200	1-1/4	3000	207	20.7	20	75	CS	306987
207999	225	1451	.040 stab pt.*	1-1/4	3000	207	20.7	20	75	CS	306987
208000	225	1451	.050 stab pt.*	1-1/4	3000	207	20.7	20	75	CS	306987

Low Pressure Red Alert Filter

Filters

- Red Alert indicator signals filter element replacement to ensure efficient filtration
- Large flow capacity is ideal for large circulation and supply systems
- Integrated mounting holes make installation to frame and equipment easy
- Bottom port for installing quick flush ball valve

213058

Ordering Information

Part No.	Assembly	Area/sq. in	Area/sq. cm	Mesh	Inlet/ Outlet npt	Maximum WPR psi	Maximum WPR bar	Maximum WPR MPa	Max. Delivery gpm	Max. Delivery lpm	Material	Manual
213057	Complete	36	232	30	3/4	300	21	2.1	6	22	Alum.	307282
213058	Complete	36	232	60	3/4	300	21	2.1	6	22	Alum.	307282
213059	Complete	36	232	100	3/4	300	21	2.1	6	22	Alum.	307282
213060	Complete	36	232	150	3/4	300	21	2.1	6	22	Alum.	307282
213061	Complete	36	232	200	3/4	300	21	2.1	6	22	Alum.	307282
213062	Complete	225	1451	30	1-1/4	300	21	2.1	20	76	Alum.	307283
213063	Complete	225	1451	60	1-1/4	300	21	2.1	20	76	Alum.	307283
213064	Complete	225	1451	100	1-1/4	300	21	2.1	20	76	Alum.	307283
213065	Complete	225	1451	150	1-1/4	300	21	2.1	20	76	Alum.	307283
213066	Complete	225	1451	200	1-1/4	300	21	2.1	20	76	Alum.	307283

Model 6
Bag Filter Housing

Filters

- High flow capacity ideal for large circulation systems
- Easy to replace bag filters are inexpensive and effective at filtering many types of media
- Flexible filter options make it easy to fine tune your filtration system

915515

Ordering Information

Part No.	Description	Inlet/ Outlet npt	Maximum WPR psi	Maximum WPR bar	Maximum WPR MPa	Max. Delivery gpm	Max. Delivery lpm	Material
915515	Model 6 (0.5 sq ft filter area)	1-1/4	500	21	2.1	15	57	CS
• 915516	Model 6 (0.5 sq ft filter area)	1-1/4	500	21	2.1	15	57	SST

• Waterborne compatible

Part Number	Description
521268	Stainless steel strainer basket
521276	Stainless steel strainer basket with 100 mesh liner
521306	Replacement eye-bolt and nut
521691	Replacement o-ring

Instruction manual: 311775

Model 6
Bag Filter Elements

Filters

- Many mesh sizes available to meet you exact filtration needs
- Plastic rim top uses fluid pressure to improve sealing force
- Stainless steel rim top uses friction to seal

Plastic Rim Top

Ordering Information

Micron	Plastic Rim Top	SST Ring Top	Compatible Filter Housings
5	16K497	521226	915515 915516
10	16K498	521227	
25	16K499	521228	
50	16K500	521229	
75	16K501	521230	
100	16K502	521231	
125	16K503	521232	
150	16K504	521233	
200	16K505	521234	
250	16K506	521235	
300	16K507	521236	

Replacement Filters

Part Number	Material	Micron Size
521311	Glazed polyester felt without cover	5
521177 521180	Glazed polyester felt encased in spun bonded nylon cover	25 100
521335 521336 521337	Glazed polyester felt encased in nylon mono-filament mesh cover.	50 75 100
521226 521227 521228 521229 521230 521231 521232 521233 521234 521235 521236	Nylon monofilament mesh.	5 10 25 50 75 100 125 150 200 250 300

Model 12
Bag Filter Housings

Filters

- High flow capacity ideal for large circulation systems
- Easy to replace bag filters are inexpensive and effective at filtering many types of media
- Flexible filter options make it easy to fine tune your filtration system

916367

Ordering Information

Part No.	Description	Inlet/ Outlet npt	Maximum WPR psi	Maximum WPR bar	Maximum WPR MPa	Max. Delivery gpm	Max. Delivery lpm	Material
915517	Model 12 (1.0 sq ft filter area)	1-1⁄2	500	21	2.1	30	114	CS
• 915518	Model 12 (1.0 sq ft filter area)	1-1⁄2	500	21	2.1	30	114	SST
• 916367	Model 12 (sanitary with Poly Lok)	1-1/2	500	35	3.5	30	114	SST

• Waterborne compatible

Part Number	Description
521276	Stainless steel strainer basket
521280	Stainless steel strainer basket with 100 mesh liner
521306	Replacement eye-bolt and nut
521691	Replacement o-ring

Instruction manual: 311775

Model 12
Bag Filter Elements

Filters

- Many mesh sizes available to meet you exact filtration needs
- Plastic rim top uses fluid pressure to improve sealing force
- Stainless steel rim top uses friction to seal

Plastic Rim Top

Ordering Information

Micron	Plastic Rim Top	SST Ring Top	Compatible Filter Housings
5	16K510	521254	915517 915518
10	16K511	521255	
25	16K512	521256	
50	16K513	521257	
75	16K514	521258	
100	16K515	521259	
125	16K516	521260	
150	16K517	521261	
200	16K518	521262	
250	16K519	521263	
300	16K520	521264	

Replacement Filters

Part Number	Material	Micron Size
521183 521184 521189	Glazed polyester felt encased in spun bonded nylon cover	5 10 100
521342 521344 521347	Glazed polyester felt encased in nylon mono-filament mesh cover.	10 25 100
521254 521255 521256 521257 521258 521259 521260 521261 521262 521263 521264	Nylon monofilament mesh.	5 10 25 50 75 100 125 150 200 250 300

Hoses, Fittings, Swivels and Gauges

Hoses, Fittings, Swivels and Gauges

The key to a productivity is a complete system with hoses, fittings, swivels and gauges.

Our gauges, fittings and hoses have options for both air and fluids, and our material selections cater to the needs of the finishing industry. They handle tough solvents, moisture sensitive or corrosive acid catalysts. They withstand the harshest environments and minimize downtime.

Bulk Hose and Fittings

Nylon Fluid Hose

- Nylon tube
- Compatible with catalyst and waterborne materials
- Order 500 ft (152 m) increments

2-piece Reusable Hose Fittings

- Compatible with catalyst and waterborne materials
- Easily create custom fluid hoses

		No Spring Guard		No Spring Guard		Spring Guard	
Part No.	Size and Pressure	1/8 in NPT(M)	1/4 in NPT(M)	1/4 in NPSM(F)	3/8 in NPSM(F)	1/4 in NPSM(F)	3/8 in NPSM(F)
061135	1/8 in ID – 475 psi (33 bar)	205436		206020			
061132	1/4 in ID – 225 psi (16 bar)	205437		205447	205448	111913	111914
061134	3/8 in ID – 200 psi (14 bar)				205439		

Bulk Hose and Fittings

Braided Fluid Hose

- Nylon braided hose
- Neoprene cover
- Compatible with catalyst and waterborne materials
- Order 500 ft (152 m) increments

3-piece Reusable Hose Fittings

- Easily create custom fluid hoses
- Three piece threaded design
- Fittings can be reused

		3 piece couplers		2 piece couplers	
Part No.	Size and Pressure	1/4 in NPSM(F)	3/8 in NPSM(F)	1/4 in NPSM(F)	3/8 in NPSM(F)
061205	1/4 in ID – 500 psi (35 bar)	104415	104084	16A989	16A990
061195	3/8 in ID – 300 psi (21 bar)		104414	16A992	16A993
061200	1/2 in ID – 500 psi (35 bar)				
061185	3/4 in ID – 500 psi (35 bar)				
061188	1 in ID – 500 psi (35 bar)				

Bulk Hose and Fittings

Flexible Air Hose

- PVC braided hose
- PVC cover
- Flexible hose allows easy movement and improved ergonomics
- Bulk ordering allows custom fabrication of specialized hoses
- Order 500 ft (152 m) increments

2-piece Reusable Hose Fittings

- Simple two piece threaded design
- Easily create custom fluid hoses

		3 piece couplers		2 piece couplers	
Part No.	Size and Pressure	1/4 in NPT(M)	1/4 in NPSM(F)	3/8 in NPSM(F)	1/2 in NPSM(F)
15E291	1/4 in ID – 300 psi (21 bar)		16A989	16A990	
15E292	5/16 in ID – 300 psi (21 bar)	16A997	15K920		
15E293	3/8 in ID – 300 psi (21 bar)		16A992	16A993	
15E294	1/2 in ID – 300 psi (21 bar)				16A995

Hoses, Fittings, Swivels and Gauges

Coupled Stainless Steel

Hoses

- Compatible with moisture sensitive materials
- Many different sizes, lengths, pressures, and connections available
- Fully assembled, includes couplings
- PTFE hose with braided SST cover

Ordering Information

Part No.	Coupling Size/Type	Length	Maximum WPR psi	Maximum WPR bar	Maximum WPR MPa	ID Size	Electrical Grounding	Tube Material	Braid No. Material	Cover Material	Cover Color	Bend Radius (in (cm)	Max. Temp. ºF (ºC)
205324	1/4 npsm(fbe)	12 in (0.3 m)	3000	210	21.0	1/4 in	Wire Braid	PTFE	1-Wire	SST	SST	2.0 (5)	200 (93)
206966	1/4 npsm(fbe)	19 in (0.48 m)	3000	210	21.0	1/4 in	Wire Braid	PTFE	1-Wire	SST	SST	2.0 (5)	200 (93)
205099	1/4 npsm(fbe)	30 in (0.76 m)	3000	210	21.0	1/4 in	Wire Braid	PTFE	1-Wire	SST	SST	2.0 (5)	200 (93)
205058	1/4 npsm(fbe)	6 ft (1.8 m)	3000	210	21.0	1/4 in	Wire Braid	PTFE	1-Wire	SST	SST	2.0 (5)	200 (93)
205349	1/4 npsm(fbe)	15 ft (4.5 m)	3000	210	21.0	1/4 in	Wire Braid	PTFE	1-Wire	SST	SST	2.0 (5)	200 (93)
204938	1/4 npsm(fbe)	25 ft (7.6 m)	3000	210	21.0	1/4 in	Wire Braid	PTFE	1-Wire	SST	SST	2.0 (5)	200 (93)
206024	1/4 npsm(fbe)	50 ft (15.2 m)	3000	210	21.0	1/4 in	Wire Braid	PTFE	1-Wire	SST	SST	2.0 (5)	200 (93)

Moisture-Lok

Hoses

- Compatible with moisture sensitive materials
- Designed specifically to prevent moisture permeation through hose lining
- Many different sizes, lengths, pressures, and connections available
- Fully assembled, includes couplings
- Ideal for use with plural component materials

Ordering Information

Part No.	Coupling Size/Type	Length	Maximum WPR psi	Maximum WPR bar	Maximum WPR MPa	ID Size
947233	1/4 npsm(fbe)	3 ft (0.9 m)	2750	190	19.0	1/4 in (6 mm)
947076	1/4 npsm(fbe)	6 ft (1.8 m)	2750	190	19.0	1/4 in (6 mm)
947077	1/4 npsm(fbe)	10 ft (3 m)	2750	190	19.0	1/4 in (6 mm)
947078	1/4 npsm(fbe)	15 ft (4.6 m)	2750	190	19.0	1/4 in (6 mm)
947079	1/4 npsm(fbe)	25 ft (7.6 m)	2750	190	19.0	1/4 in (6 mm)
947080	1/4 npsm(fbe)	50 ft (15.2 m)	2750	190	19.0	1/4 in (6 mm)
947475	3/8 npt(mbe)	2 ft (0.6 m)	2250	160	16.0	3/8 in (10 mm)
947081	3/8 npt(mbe)	6 ft (1.8 m)	2250	160	16.0	3/8 in (10 mm)
947082	3/8 npt(mbe)	10 ft (3 m)	2250	160	16.0	3/8 in (10 mm)
947083	3/8 npt(mbe)	15 ft (4.6 m)	2250	160	16.0	3/8 in (10 mm)
947084	3/8 npt(mbe)	25 ft (7.6 m)	2250	160	16.0	3/8 in (10 mm)
947085	3/8 npt(mbe)	50 ft (15.2 m)	2250	160	16.0	3/8 in (10 mm)
947086	1/2 npt(mbe)	6 ft (1.8 m)	2000	140	14.0	1/2 in (13 mm)
947087	1/2 npt(mbe)	10 ft (3 m)	2000	140	14.0	1/2 in (13 mm)
947089	1/2 npt(mbe)	25 ft (7.6 m)	2000	140	14.0	1/2 in (13 mm)
947091	3/4 npt(mbe)	6 ft (1.8 m)	1500	103	10.3	3/4 in (19 mm)
947092	3/4 npt(mbe)	10 ft (3 m)	1500	103	10.3	3/4 in (19 mm)
947093	3/4 npt(mbe)	15 ft (4.6 m)	1500	103	10.3	3/4 in (19 mm)
947094	3/4 npt(mbe)	25 ft (7.6 m)	1500	103	10.3	3/4 in (19 mm)
947096	1 npt(mbe)	6 ft (1.8 m)	1500	103	10.3	1 in (25 mm)

High Pressure Swivels

Swivels and Valves

- Improve mobility and ergonomics with high pressure swivels
- Swivels provide added rotational flexibility while providing high quality sealing even at high pressures
- Inline and Z configurations availabl

189018

207948

Ordering Information

Part No.	Inlet/Outlet npt	Maximum WPR psi	Maximum WPR bar	Maximum WPR MPa	Packings	Wetted Parts	Manual	Suggested Material*
204083	1⁄4 npt(m) 1⁄8 npt(f)	8000	551	55.1	Leather	Steel-plated	306708	Oil, Grease, Lubricants
204084	1⁄4 npt(m) 1⁄4 npt(f)	8000	551	55.1	Leather	Steel-plated	306708	Oil, Grease, Lubricants
214925	1⁄4 npsm(f) 3⁄8 npt(f)	5000	345	34.5	Leather	Steel-plated	306861	Oil, Grease, Lubricants
207946	1⁄2 npsm(f) 3⁄8 npt(f)	6000	413	41.3	Polyurethane	Steel-plated	307005	Oil, Grease, Lubricants, Solventborne Paint
207947	1⁄2 npt(f) 1⁄2 npt(m)	6000	413	41.3	Polyurethane	Steel-plated	307005	Oil, Grease, Lubricants, Solventborne Paint
214926	1⁄2 npsm(f) 3⁄8 npt(f)	5000	345	34.5	Leather	Steel-plated	306861	Oil, Grease, Lubricants
• 239394	1⁄4 npsm(m) 1⁄4 npsm(f) Includes: filter chamber and 100 mesh tip filter (205264)	7500	517	51.7	PTFE	SST		Paint
• 189018	1⁄4 npsm(m) 1⁄4 npsm(f)	7500	517	51.7	PTFE	SST		Paint & Catalyst
• Waterborne compatible								
207948 (Z-Type Swivel)	1⁄2 (m) 1⁄2 (f)	6000	413	41.3	Polyurethane	Steel-plated	307005	Oil, Grease, Lubricants, Solventborne Paint

Caution: Z-swivels to be used with non-abrasive fluids only.
*General suggestion only. Results may vary depending on chemical composition.

Automatic Spray Gun Valve

Swivels and Valves

- Automate your system with this robust pneumatically operated valve
- Mount easily to 1/2in (12.7mm) rod using built-in set screw
- Stainless steel wetted materials are compatible with catalyst, waterborne, and other finishing materials
- Easily install a wide variety of flat tips for many spraying options
- Adjustment knob for fine tuning your process

206660

Ordering Information

Part No.	Inlet/Outlet npt	Maximum WPR psi	Maximum WPR bar	Maximum WPR MPa
206660	1⁄4 npt(m) 1⁄8 npt(f)	3000	517	51.7

Instruction manual: 306830

Check Valves

Swivels and Valves

- Stainless steel and PTFE materials are compatible with catalyst, waterborne, and other finishing materials
- Prevent fluid leakage and backflow
- Compact and easy to install
- Improves pump performance
- Easily install a wide variety of flat tips for many spraying options

501867

Ordering Information

		Maximum WPR				
Part No.	Inlet/Outlet npt	psi	bar	MPa	Packings	Wetted Parts
• 501867*	1/4 x 1/4 npt(mbe)	3000	207	20.7	PTFE	303 SST
• 501684*	3/8 x 3/8 npt(mbe)	3000	207	20.7	PTFE	303 SST
• 501603*	1/2 x 1/2 npt(fbe)	3000	207	20.7	PTFE	303 SST

• Waterborne compatible
*501867, 501684 and 501603 are poppet style

Pressure Relief Valve

Swivels and Valves

- Automatically relieves system pressure at specified rating to protect your system from overpressure
- Stainless steel and PTFE materials are compatible with catalyst, waterborne, and other finishing materials
- Compact and easy to install
- Tungsten and carbide materials ensure low wear and long life

237073

Ordering Information

Part No.	Inlet/ Outlet npt	Relief Port	Maximum WPR			Relief "Cracking" Pressure			Packings	Wetted Parts	Manual
			psi	bar	MPa	psi	bar	MPa			
• 237060	1/2 (f) 1/2 (m)	1/2 npt(m)	475-575	33-40	3.3-4.0	750	52	5.2	PTFE	304 SST, tungsten carbide	308547
• 237061	1/2 (f) 1/2 (m)	1/2 npt(m)	950-1150	66-79	6.6-7.9	1500	103	10.3	PTFE	304 SST, tungsten carbide	308547
• 237112	1/2 (f) 1/2 (m)	1/2 npt(m)	1400-1800	97-124	9.7-12.4	2250	155	15.5	PTFE	304 SST, tungsten carbide	308547
• 237062	1/2 (f) 1/2 (m)	1/2 npt(m)	1800-2300	124-159	12.4-15.9	3000	207	20.7	PTFE	304 SST, tungsten carbide	308547
• 237073	1/2 (f) 1/2 (m)	1/2 npt(m)	2300-2900	159-200	15.9-20.0	3750	259	25.9	PTFE	304 SST, tungsten carbide	308547
• 237063	1/2 (f) 1/2 (m)	1/2 npt(m)	2900-3600	200-248	20.0-24.8	4500	310	31.0	PTFE	304 SST, tungsten carbide	308547
• 237074	1/2 (f) 1/2 (m)	1/2 npt(m)	3600-5000	248-345	24.8-34.5	6000	414	41.4	PTFE	304 SST, tungsten carbide	308547

• Waterborne compatible

Hoses, Fittings, Swivels and Gauges

Ball Valves

Swivels and Valves

- Stainless steel and PTFE materials are compatible with catalyst, waterborne, and other finishing materials
- Many different connection options to meet your specific needs
- 500 psi (35 bar) pressure ratio

Part No.	Inlet/Outlet npt
237528	1/4”NPT(M) x 1/4”NPT(M)

Part No.	Inlet/Outlet npt
237529	1/4”NPT(M) x 3/8”NPSM(M)

Part No.	Inlet/Outlet npt
237530	3/8” NPT(M) x 1/4” NPT(M)

Part No.	Inlet/Outlet npt
237531	3/8”NPT(M) x 3/8”NPT(M)

Part No.	Inlet/Outlet npt
237532	3/8”NPT(F) x 3/8”NPT(F)

Part No.	Inlet/Outlet npt
237533	3/8”NPSM(M) x 3/8”NPT(M)

Part No.	Inlet/Outlet npt
237535	3/8”NPT(F) x 3/8”NPSM(M)

Part No.	Inlet/Outlet npt
237536	3/8” OD Tube x 3/8” NPSM(M)

Part No.	Inlet/Outlet npt
237537	3/8” OD Tube x 3/8” OD Tube

Part No.	Inlet/Outlet npt
237538	3/8” OD Tube x 3/8” NPT(M)

Part No.	Inlet/Outlet npt
237539	3/8” OD Tube x 3/8”NPSM(M)

Part No.	Inlet/Outlet npt
237540	1/2” OD Tube x 3/8” NPSM(M)

Part No.	Inlet/Outlet npt
237541	1/2” OD Tube x 3/8” NPSM(M)

Part No.	Inlet/Outlet npt
237542	3/8” OD Tube x 3/8” OD Tube

Instruction manual: 307628

Pipe Fittings

Other Accessories

Bushing

Reducing, Standard & Expanding

Part No.	Male Thread	Female Thread
100030	1/4 npt	1/8 npt
100730	3/8 npt	1/8 npt
100176	3/8 npt	1/4 npt
159841	3/8 npt	1/4 npt
168160	3/8 npt	1/4 npt
100329	1/2 npt	1/8 npt
100206	1/2 npt	1/4 npt

Part No.	Male Thread	Female Thread
102022	1/2 npt	1/4 npt
100081	1/2 npt	3/8 npt
100615	3/4 npt	1/4 npt
100896	3/4 npt	1/2 npt
100380	1 npt	1/2 npt
158586	1 npt	3/4 npt

Street Elbow

Part No.	Male Thread	Female Thread
100840	1/4 npt	1/4 npt
155699	3/8 npt	3/8 npt
158683	1/2 npt	1/2 npt
176393	3/4 npt	3/4 npt

Pipe Adapters

Part No.	Male Thread	Female Thread
150171	1/8 npt	1/8 npt
159840	1/8 npt	1/4 npt
156580	1/8 npt	3/8 npt
150287	1/4 npt	3/8 npt

Part No.	Male Thread	Female Thread
159842	1/4 npt	1/2 npt
150286	3/8 npt	3/8 npt
156022	3/8 npt	1/2 npt
168595	1/2 npt	3/4 npt

Coupling

Standard

Part No.	Thread
100451	1/8 npt
100175	1/4 npt
162024	3/8 npt
158581	1/2 npt
100385	3/4 npt
100474	1 npt

Hex Nipple

Standard & Reducing

Part No.	Male Thread	Female Thread
151519	1/4 npt	1/8 npt
156971	1/4 npt	1/4 npt
156296	3/8 npt	1/8 npt
165198	3/8 npt	1/4 npt
156849	3/8 npt	3/8 npt
162449	1/2 npt	1/4 npt

Part No.	Male Thread	Female Thread
159239	1/2 npt	3/8 npt
158491	1/2 npt	1/2 npt
157191	3/4 npt	1/2 npt
175013	3/4 npt	3/4 npt
158555	1 npt	3/4 npt

Square

Head Plug

Part No.	Thread
111697	1/4 npt
100040	3/8 npt
100737	1/2 npt
104663	3/4 npt

Pipe Swivels

Other Accessories

Straight Swivel Adapter

Male x Female

Part No.	Rigid Thread	Swivel Thread
208434	1/8 npt	1/4 npt
156823	1/4 npt	1/4 npt
157705	1/4 npt	3/8 npt
155665	3/8 npt	3/8 npt
162505	3/8 npt	1/2 npt

Part No.	Rigid Thread	Swivel Thread
156684	1/2 npt	1/2 npt
158256	1/2 npt	3/8 npt
157785	3/4 npt	3/4 npt
202965	1 npt	3/4 npt
160022	1 npt	1 npt

Straight Swivel Adapter

Female x Female

Part No.	Rigid Thread	Swivel Thread
155570	1/4 npt	1/4 npt
159153	3/8 npt	1/4 npt
156173	3/8 npt	3/8 npt
155653	1/2 npt	1/4 npt

Part No.	Rigid Thread	Swivel Thread
161077	1/2 npt	3/8 npt
155865	1/2 npt	1/2 npt
156172	3/4 npt	3/4 npt
158383	1 npt	1 npt

90º Swivel Adapter

Female x Female

Part No.	Rigid Thread	Swivel Thread
157676	1/4 npt	1/4 npt
155677	3/8 npt	3/8 npt
159801	3/8 npt	1/2 npt
157416	1/2 npt	1/2 npt
156589	3/4 npt	3/4 npt

90º Swivel Adapter

Male x Female

Part No.	Rigid Thread	Swivel Thread
155541	1/4 npt	1/4 npt
155495	3/8 npt	1/4 npt
155494	3/8 npt	3/8 npt
217430	3/8 npt	1/2 npt
161037	1/2 npt	3/8 npt
155470	1/2 npt	1/2 npt
160327	3/4 npt	3/4 npt

45º Swivel Adapter

Male x Female

Part No.	Rigid Thread	Swivel Thread
161889	3/8 npt	3/8 npt
105281	3/4 npt	3/4 npt

Hoses, Fittings, Swivels and Gauges

Fluid Gauges

Stainless Steel Low Pressure Fluid Gauges

- Corrosion Resistant
- 2.5 in (63 mm) diameter dial
- 1/4 in NPT(M) connection
- Bottom mount
- Shatterproof glass

Part No.	Pressure Range
187875	0-30 psi (0-2 bar)
187874	0-100 psi (0-7 bar)
187873	0-200 psi (0-14bar)
187876	0-300 psi (0-21 bar)

Stainless Steel High Pressure Fluid Gauges

- Corrosion Resistant
- 2.5 in (63 mm) diameter dial
- 1/4 in NPT(M) connection
- Bottom mount
- Shatterproof glass
- Liquid filled to reduce indicator pulsation

Part No.	Pressure Range
105770	0-1000 psi (0-68 bar)
102814	0-5000 psi (0-344 bar)

Stainless Steel High Pressure Fluid Gauges

- Corrosion Resistant
- 2.5 in (63 mm) diameter dial
- 1/4 in NPT(M) connection
- Back mount
- Shatterproof glass
- Liquid filled to reduce indicator pulsation

Part No.	Pressure Range
113641	0-3000 psi (0-207 bar)
113654	0-5000 psi (0-344 bar)

Stainless Steel Fluid Gauges with Dampeners

- Dampener protects gauge from severe pressure pulsation
- Corrosion Resistant
- 2.5 in (63mm) diameter dial
- 1/4 in NPT connections

Part No.	Pressure Range / Inlet
208855	0-300 psi (0-21 bar) 1/4 in NPT(M)
110182	0-2000 psi (0-140 bar) 1/4 in NPT(F)
206171	0-200 psi (0-140 bar) 1/4 in NPT(F)

Air Gauges

Low Pressure Air Gauges

- Black enamel case
- Bottom mount
- 1/8 in NPT and 1/4 in NPT connections

Part No.	Pressure Range / Inlet
110436	0-100 psi (0-7 bar) 1/8 in NPT(M)
100960	0-200 psi (0-14 bar) 1/4 in NPT(M)

Low Pressure Air Gauges

- Black enamel case
- Back mount
- 1/8 in NPT and 1/4 in NPT connections

Part No.	Pressure Range / Inlet
108190	0-100 psi (0-7 bar) 1/8 in NPT(M)
101689	0-200 psi (0-14 bar) 1/4 in NPT(M)

Standard Gun Washer

Other Accessories

- Cleans 2 guns and 2 cups
- Plastic tank and reservoir
- Waterborne and non-waterborne compatibility options
- High quality Graco pump for reliability
- 112635 has hose wash capability

112635

Ordering Information

Part No.	Model	Air Pressure Operating Range	Maximum Tank Capacity	Air Inlet	Fluid Drain Valve	Approx. Dry Weight	Wetted Parts	Manual
112634	Economy	25 to 100 psi (1.7 to 7 bar)	5 gal (18.9 l)	1/2 npt(f)	1 in npt(m)	63 lb (28.6 kg)	carbon steel, polyethylene (tank), stainless steel, aluminum, brass, PTFE, acetal	308393
• 112635	Standard	25 to 100 psi (1.7 to 7 bar)	5 gal (18.9 l)	1/2 npt(f)	1 in npt(m)	65 lb (29.5 kg)	stainless steel, aluminum, polyethylene (tank) brass, PTFE, acetal	308393

• Waterborne compatible

Professional Gun Washer

Other Accessories

- Corrosion resistant materials
- Industrial strength construction
- Cleans 2 guns and 2 cups in one minute
- Cleans hoses and 5 gallon cans
- Pot cleaning kit available
- Flow-through brush/wand for manual cleaning
- 5 gallon internal reservoir
- High quality Graco pump for reliability
- Fume extractor
- Automatic timer
- FM Approved

117438

Ordering Information

Part No.	Model	Air Pressure Operating Range	Maximum Tank Capacity	Air Inlet	Fluid Drain Valve	Approx. Dry Weight	Wetted Parts	Manual
• 117438*	Premium	25 to 100 psi (1.7 to 7 bar)	5 gal (18.9 l)	1/4 npt(f)	1 in npt(m)	86 lb (39 kg)	stainless steel, brass, PTFE, acetal	308393

• Waterborne compatible
* FM Approved

Fluid Heater Kit

Other Accessories

- Variable heating levels for consistent viscosity control
- Approved for hazardous locations
- 7250 psi (500 bar) maximum working pressure
- Stainless steel construction is compatible with catalyst, waterborne, and other finishing materials
- Includes bracket, hose, and fittings for easy integration

Ordering Information

Part No.	Description
239850	120V fluid heater kit (includes bracket, hose, fittings)
239851	240V fluid heater kit (includes bracket, hose, fittings)
239852	240V fluid heater kit (includes hose, fittings)
241883	200V fluid heater kit (includes bracket, hose, fittings)

Instruction manual 308771.

Siphon Kits

Other Accessories

Straight Swivel Adapter

Male x Female

Part No.	Outlet npt	Suction Tube Length in (mm)	OD in	Hose No.	Use	Manual
207484	3/4 npt(f) swivel	18 (457)	.840	214906	Pail	307309
208259	3/4 npt(f) swivel	36 (914)	1.5	214961	Drum	208259
208920	3/4 npt(f) swivel	15 (381)	1.315	170706	Pail	307786
207485	3/4 npsm(f)	36 (914)	1.50	214961	Drum	207485
206268	3/4 npt(m)	18 (457)	.840	214960	Pail	307051
203992	1 1/2 npt(m)	36 (914)	1.315	155816	Drum	306508
223009	3/4 npt(m)	36 (914)	–	–	Drum	–
222916	2 npt(m)	36 (914)	–	–	Drum	308081

For use with Husky 715 & 1030 pumps

Siphon Tubes

Part No.	Outlet npt	Length in (mm)	OD in	Use
165767	3⁄4 npt(f)	18.0 (450)	7/8 in	Pail
206266	3⁄4 npt(f)	37.0 (940)	1-1/2 in	Drum
170113	3⁄4 in dia.*	18.0 (450)	.840	Pail
166630	1 npt(mbe)	30.0 (762)	1-5/16 in	Drum

*Non-threaded: 101818 hose clamp required.

Ground Clamp

Other Accessories

- Properly ground equipment to prevent sparks or other hazards.
- Ground work piece to maximize transfer efficiency with electrostatic guns.
- Spring-loaded clamp with sharp teeth ensure proper connection.
- Up to 16 feet long when fully uncoiled. Easily reach and move your work piece.

238909

Ordering Information

Part No.	Description
238909	Coil extends 16 ft 14 GA wire

ABOUT GRACO

PROVEN QUALITY. LEADING TECHNOLOGY.

Founded in 1926, Graco is a world leader in fluid handling systems and components. Graco products move, measure, control, dispense and apply a wide range of fluids and viscous materials used in vehicle lubrication, commercial and industrial settings.

The company's success is based on its unwavering commitment to technical excellence, world-class manufacturing and unparalleled customer service. Working closely with qualified distributors, Graco offers systems, products and technology that set the quality standard in a wide range of fluid handling solutions. Graco provides equipment for spray finishing, protective coating, paint circulation, lubrication, and dispensing sealants and adhesives, along with power application equipment for the contractor industry. Graco's ongoing investment in fluid management and control will continue to provide innovative solutions to a diverse global market.

GRACO LOCATIONS

MAILING ADDRESS
P.O. Box 1441
Minneapolis, MN 55440-1441
Tel: 612-623-6000
Fax: 612-623-6777

AMERICAS

MINNESOTA
Worldwide Headquarters
Graco Inc.
88-11th Avenue N.E.
Minneapolis, MN 55413

EUROPE

BELGIUM
European Headquarters
Graco N.V.
Industrieterrein-Oude Bunders
Slakweidestraat 31
3630 Maasmechelen,
Belgium
Tel: 32 89 770 700
Fax: 32 89 770 777

ASIA PACIFIC

AUSTRALIA
Graco Australia Pty Ltd.
Suite 17, 2 Enterprise Drive
Bundoora, Victoria 3083
Australia
Tel: 61 3 9468 8500
Fax: 61 3 9468 8599

CHINA
Graco Hong Kong Ltd.
Shanghai Representative Office
Building 7
1029 Zhongshan Road South
Huangpu District
Shanghai 200011
The People's Republic of China
Tel: 86 21 649 50088
Fax: 86 21 649 50077

INDIA
Graco Hong Kong Ltd.
India Liaison Office
Room 443, Augusta Point
Regus Business Centre 53
Golf Course Road
Gurgaon, Haryana
India 122001
Tel: 91 124 435 4208
Fax: 91 124 435 4001

JAPAN
Graco K.K.
1-27-12 Hayabuchi
Tsuzuki-ku
Yokohama City, Japan 2240025
Tel: 81 45 593 7300
Fax: 81 45 593 7301

KOREA
Graco Korea Inc.
Shinhan Bank Building
4th Floor #1599
Gwanyang-Dong, Dongan-Ku,
Anyang-si, Korea 431-060
Tel: 82 31 476 9400
Fax: 82 31 476 9801

SALES/ DISTRIBUTION/ SERVICE

Call today for product information or to request a demonstration.

877-84GRACO (1-877-844-7226) or visit us at www.graco.com.

Graco Inc. is registered to I.S. EN ISO 9001

North America
Customer Service
800-328-0211
Fax 877-340-6427

©2012 Graco Inc. Electronic Only 9/12 All written and visual data contained in this document are based on the latest product information available at the time of publication. Graco reserves the right to make changes at any time without notice. All other brand names or marks are used for identification purposes and are trademarks of their respective owners.